CLOOS

Weld your way.

OPERATING INSTRUCTIONS

QINEO CHAMP PRO

-En-

This is a translation of the original operating instructions.

WP-L - 02/19 - Rev.1.1

Keep for future use

qineo®

Carl Cloos Schweisstechnik GmbH
Carl-Cloos-Strasse 1
35708 Haiger
GERMANY

Telephone +49 (0)2773 85-0
Telefax +49 (0)2773 85-275
E-mail info@cloos.de
www.cloos.de

CARL CLOOS Schweisstechnik GmbH
Industriestrasse
35708 Haiger/Germany
Tel. +49 (0)2773/85-0
Fax. +49 (0)2773/85-275
mail: info@cloos.de
www.cloos.de

Weld your way.

EU declaration of conformity

No. CMM0516QNCH_01

Product description:	MIG/MAG welding machine
Model name:	QINEO CHAMP, QINEO CHAMP PRO, WD
Serial number:	Refer to the nameplate on the back of the device
Manufacturer:	CARL CLOOS Schweisstechnik GmbH
Address:	Industriestrasse 22-36 35708 Haiger Germany

The manufacturer bears sole responsibility for issuing the declaration of conformity.

The aforementioned products covered by the declaration satisfy the relevant statutory provisions of the Union:

Low Voltage Directive:

2014/35/EU Directive of the European Parliament and of the Council of 26 February 2014 on the harmonisation of laws of Member States relating to the making available on the market of electrical equipment designed for use within certain voltage limits; Official Journal of the EU L96, 29/03/2014, Pages 357 - 374

EMC Directive:

2014/30/EU Directive of the European Parliament and of the Council of 26 February 2014 on the harmonisation of laws of Member States relating to electromagnetic compatibility; Official Journal of the EU L96, 29/03/2014, Pages 79 - 106

RoHS Directive:

2011/65 /EU Directive of the European Parliament and of the Council of 8 June 2011 on the restriction of use of certain hazardous substances in electrical and electronic equipment; Official Journal of the EU L174, 01/07/2011, Pages 88 - 110

Agreement of the product stated with the regulations in the directives applied is verified with conformance to the following standards and regulations:

- EN 60974-1	Arc Welding Equipment Part 1: Welding Power Sources
- EN 60974-2	Arc Welding Equipment Part 2: Liquid Cooling Systems
- EN 60974-5	Arc Welding Equipment Part 5: Wire Feed Units
- EN 60974-10	Arc Welding Equipment Part 10: Requirements of Electromagnetic Compatibility (EMC)

Major conversions and add-ons which are not carried out by the manufacturer or the manufacturer's authorised representative(s) result in termination of this declaration of conformity.

Signed for and in the name of:
CARL CLOOS Schweisstechnik GmbH

35708 Haiger, 30/05/16

Signature:
Identification of signatory:

Gerald Mies
Managing director

Contents

Block 1 Operational Safety 11

1. Foreword 12
2. Safety symbols in this document 13
3. Safety specifications for MIG/MAG welding machines 14
3.1 Basic safety specifications for the operation of the welding machine 14
3.2 Application as directed 15
3.3 Self protection and personal protection when MIG/MAG welding 15
3.4 Electrical danger due to mains current and welding current 18
3.5 Particular dangers when MIG/MAG welding 24
3.6 Safety precautions in daily operation 25
4. Environmental circumstances 27
4.1 Storage 27
4.2 Transport 27
5. Qualification of users 28

Block 2 Basic information Qineo Champ Pro 29

1. Connection overview welding power source 30
2. Connection overview optional interfaces 32
3. Connection overview QWD- M4 33
4. Connection overview QWD-A4 33
5. Product description 34
6. Commissioning 36
7. Shutdown / Recycling 40
8. Technical data 41

Block 3 PREMIUM operating module 43

1. Operating controls 45
2. Main menu 46
3. MAIN - Synergy 47
4. MAIN - Op. (operating modes) 47
4.1 2-cycle 47
4.2 4-cycle 48
4.3 Super 4-cycle 49
4.4 Spot welding 49
4.5 External 49
5. MAIN process 50
5.1 Electrode 50
5.2 TIG 50
5.3 Speed Pulse 50
5.4 Pulse 50
5.5 MIG/MAG Normal 50
5.6 Syn off 51
5.7 Processes with the appendix CW (Cold Weld) 51
5.7.1 S-Pulse CW 51
5.7.2 Normal CW 52
5.8 Rapid Weld 52

6. MAIN - Function 53
6.1 DuoPulse 53
6.2 CleanStart 53
6.3 Blow through 53
6.4 Wire forward 54
6.5 Wire backward 54
6.6 Gas manually 54
6.7 Start manually 54
7. MAIN - Progr. (Programming) 55
7.1 Parameters in the operating modes 2-cycle and 4-cycle 57
7.2 Parameters in the operating mode Super-4-cycle 57
7.3 Parameters in operating mode Spot Welding / Interval 59
7.4 Setting ranges 60
7.4.1 Input of setting ranges 60
7.4.2 Prerequisite to use the setting ranges 61
7.4.3 Deactivating the setting ranges 63
7.5 MAIN - Programming - Tandem 63
7.6 MAIN - Programming - Pulse synchronisation 63
7.7 "Expert Mode" (single parameter mode) 64
7.7.1 Main parameters in the "Expert Mode" 64
7.7.2 Secondary parameters in the "Expert Mode" 65
7.7.3 "DuoPulse parameters" in the "Expert Mode" 66
8. MAIN - Measured values 67
8.1 Operating data 67
8.1.1 Data set switching 1/2 68
8.1.2 Seam counter Setup 69
8.1.3 Consumption costs 70
9. MAIN - Display 70
10. MAIN (2) - Config (Configuration) 72
10.1 Config - General 72
10.1.1 Display brightness 72
10.1.2 MHW 405 TQ 72
10.1.3 Control coolant pump and fan 73
10.2 Config - General (2) 73
10.3 Config - General (3) 74
10.3.1 Config - General - Basic settings 74
10.3.2 Config - General - SD module 78
10.3.3 Config - General - Options 78
10.4 Config - Water monitoring 80
10.5 Config - Compensation 81
10.6 Access rights 83
10.6.1 Config - Access management 83
10.6.2 Config - User management and PAK (option) 85
10.7 Config - PC adaptation 91
10.8 Config - Clock 91
10.9 Config - Process monitoring 92
11. MAIN (2) - Diagnostics 93
11.1 Diagnostics Cooling 94
11.2 Diagnostics Software versions 94
11.3 Diagnostics I / 0 (Inputs and Outputs) 95
11.4 Diagnostics VBC module 96
11.5 Diagnostics QWD 97
11.6 Diagnostics PC adaptation 98

11.7 Diagnostics Tandem ... 98
11.8 Diagnostics pulsed arc synchronisation ... 99
11.9 Diagnostics System logbook ... 99
11.9.1 Diagnostics Robot (from x.11.30 on) ... 101
12. MAIN (2) - Language ... 102
13. MAIN (2) - Data backup ... 103
13.1 Copy job to SD memory card ... 103
13.2 Read job from SD memory card ... 104
13.3 Copy characteristic curve to SD card ... 104
13.4 Read characteristic curve from SD memory card ... 104
13.5 Copy configuration data to SD memory card ... 104
13.6 Read configuration data from SD memory card ... 104
14. User log on/off ... 105
14.1 MAIN (2) - Log on ... 105
14.2 MAIN (2) - Log off ... 105
15. Job mode ... 106
15.1 Save job ... 106
15.2 Overwrite an existing job ... 107
15.3 Copy a job ... 107
15.4 Activate job ... 108
Block 4 Additional information 109
1. RC Plus (Remote Control) ... 110
2. MHW 405 TQ (2-button torch) ... 111
3. SD module ... 112
3.1 Monitoring channels ... 112
3.2 Submenus ... 116
3.3 Configure monitoring channel ... 117
3.4 Logbook ... 119
3.5 Combine the application example SD monitoring with QIROX controller ... 122
Block 5 Qineo Wire Drive 125
1. Technical data ... 126
1.1 Weight ... 126
1.2 Dimensions ... 126
1.3 Ambient conditions ... 126
1.4 Compatibility list ... 126
2. QINEO Wire Drive M4 ... 127
2.1 Connection overview M4 ... 128
3. QINEO Wire Drive A4 ... 129
3.1 Structure and function A4 ... 130
4. QINEO Wire Drive AR4 ... 131
4.1 Connection overview AR4 ... 132
5. Function ... 133
5.1 Button "Gas manually" ... 133
5.1.1 Adjustment of the gas flow rate ... 133
5.2 Button "Wire forward" or "Wire backward" ... 134

6. Commissioning 135
6.1 Safety instructions for commissioning 135
6.1.1 Risks due to mechanical hazards 135
6.1.2 Risks due to electrical hazards 135
6.2 Reducing insert 136
6.2.1 Disassembly reducing insert QWD-M 136
6.3 Installation/change of the wire drive rollers 137
6.3.1 QWD-M 137
6.4 Inserting the welding wire 139
6.4.1 QWD-M 139
6.5 Adjustment of the pressure clamps 141
7. Maintenance 142
8. Error list 143
9. Disposal and Recycling 144
Block 6a Error messages 145
1. Error messages 146
1.1 Error list 147
Block 6b General maintenance instructions 159
1. Maintenance and Care 160
1.1 Regular testing 161
1.2 Semi-annual testing 162
1.3 Annual testing 162
1.4 Special testing 163
1.4.1 Optional filter mat in the cooling unit 163
1.4.2 Crane suspensions at the wire drive unit 163
1.4.3 Electrolytic capacitors of the transistor cascades 163
Block 7 Automation 165
1. Interfaces 166
1.1 QOMI Module (Open Machine Interface) 166
1.2 Profibus Module (Process Field Bus) 166
1.3 ProfiNet Module 167
1.4 DeviceNet Module 167
1.5 Ethernet-IP Module 167
2. QIROX Technology Interface (QTI) 168
2.1 Software compatibility 168
2.2 Assignment of protocol type for Tandem operation 168
2.3 Additional welding processes protocol type 2 168
2.4 Control of communication between welding power source and robot 168
3. Basic configuration Operating mode "Tandem" 169
3.1 Connection diagram 169
3.2 Conditions 169
3.3 Pre-adjustments 170

3.3.1 QIROX robots 170
3.3.2 QINEO welding power sources 170

3.4 Job programming QINEO welding power sources 172
3.4.1 Select operating mode "Tandem" 172
3.4.2 Adjustment of the synergy variant 174
3.4.3 "Active QWD" setting 175

4. Pulse synchronisation 178

4.1 Configuration 178
4.1.1 Synchronisation mode 179
4.1.2 Phase shift 180

5. Job allocation 182

Block 1 Operational Safety

1. Foreword

Dear customer,

You have decided to purchase a CLOOS shielding gas welding machine from the QINEO series. This is a brand-name product which will meet your highest quality requirements.

Messrs. CLOOS Schweisstechnik GmbH are a company certified to DIN ISO 9001 and who put great emphasis on development, manufacture and quality of their products. The power sources and the accessories in the QINEO series have been developed, designed and manufactured according to the generally accepted safety regulations. This is confirmed by the declaration of conformity and CE marking.

The technical design, texts and photographs of the welding machines correspond to the development status at the date of the printing of this documentation.
The contents of the documentation will be adapted to technical developments.

Subject to alterations.

The copyright law for the complete documentation remains with the manufacturer.

2. Safety symbols in this document

INFO!

INFO!
Practical tips and other useful information!

ATTENTION!

ATTENTION!
The signal word indicates a hazard without risk of a physical impairment, which, if not avoided, can lead to property damage.

CAUTION!

CAUTION!
Describes a probably dangerous situation which may result in minor injury or damage to property.

WARNING!

WARNING!
Describes a probably dangerous situation which may result in severe injury or even death.

DANGER!

DANGER!
Describes an imminent danger which may result in severest injury or even death.

Xn

Hazardous materials !

3. Safety specifications for MIG/MAG welding machines

WARNING!

Connection, service and repair works must only be carried out by qualified personnel who have the appropriate professional training and sufficient experience and knowledge of the power source and who are able to perform the required works in accordance with the relevant safety specifications.
(Electrician as per BGV A3, Electrical plants and operating equipment).

3.1 Basic safety specifications for the operation of the welding machine

The design and construction of the welding machine corresponds to **DIN EN 60 974 - 1.** (Arc welding equipment, part 1, Welding power sources).
It corresponds to the latest state-of-the-art in technology and the recognised rules of safety engineering. It must be operated by trained personnel or users who have been familiarized with the machine to prevent danger due to inappropriate handling or operation which is not in accordance with the specifications.

For the use in Germany the following regulations have to be considered!

- Safety regulations **BGV D1**
- Safety regulations **BGV A3**
- National and regional fire protection rules
- Works on supply voltage, repairs and maintenance must be carried out by qualified personnel only (electricians as defined in BGV A3).
- Movable mains supply and welding lines must be protected against damage.
- Do not install the power source in a working area where welding with increased electrical hazard takes place.
- The machine must be switched off and disconnected for all maintenance work.
- All labels and danger signs on the welding machine must be kept easily legible and must not be covered, coated, pasted over or removed.
- The operating manual must always be available near the welding machine. In addition, the regional rules for prevention of accidents and environment must be available and be adhered to.

INFO!

If repair work is carried out by unauthorised persons and safety regulations are not adhered to, **any guarantee and warranty claims** become invalid.

3.2 Application as directed

The welding machine is exclusively intended for application as directed. The welding machine must only be used for welding processes and working ranges scheduled on the power sign.

Every other use is regarded as

not directed.

The manufacturer is **not** liable for damages occurred hereof.

CAUTION!

The power source must **never** be used for the following works:

- Thawing of pipe lines
- Loading of batteries/accumulators
- Starting of motors

The machine is intended for **industrial use** and must not be used in **residential buildings**. The manufacturer is **not** liable for damages due to use in residential buildings. The power source is subject to the standards **IEC 61000-3-4** or **EN 61000-3-2**.

3.3 Self protection and personal protection when MIG/MAG welding

- When welding, dry and flame resistant protective clothing, apron, helmet and gloves as well as solid, well-insulated work shoes should be worn.

3.3.1. Danger due to electromagnetic fields (EMF)

According to the Accident Prevention Regulations **BGV B11 "Electro-magnetic fields"** the permissible values of electric and magnetic fields will **not** be exceeded with arc welding systems in the environment of the power source, the feed lines and the torch.

INFO!

However, the safety values for persons with **active** implants (cardiac pacemakers, defibrillators and similar) might be exceeded in the environment of welding machines.

Due to the low magnetic fields of arc welding systems, a safety distance of 1 m to the live parts such as cable assemblies, cables and torch/arc is recommended. During MIG/MAG welding, the danger is due to magnetic fields and during TIG welding due to the high voltage pulses of arc ignition units.

In practice, various models of active implants are used, the threshold values of which depend on different parameters (type of implant, operating mode, programming of the implant). As far as the occupational safety is concerned, an individual risk assessment is recommended in each individual case. If this is not possible, the generally valid safety values - which are based on the most sensible implants - can be applied, according to standard **EN DIN VDE 0848-3-1** "Safety in electric, magnetic and electromagnetic fields - Protection of persons with active physical aids".

3.3.2. High frequency electromagnetic compatibility

EMC machine classification in accordance with standard EN 60974-10 (see type plate or the specification of technical data).

Class B machines meet the EMC requirements in industrial and residential areas, including residential areas connected to the public low voltage supply network.

Class A machines are not intended for use in residential areas where electric energy is drawn from the public low voltage supply network. It is difficult to guarantee electromagnetic compatibility for class A machines due to conducted emissions and radiated interferences in these areas.

3.3.3. Radiation

Ultraviolet and **infrared** radiation are released during welding.

- Protect skin and particularly the eyes. Keep eye drops and skin cream with a high sun protection factor available.
- Always use safety glasses according to **DIN EN 166** and **DIN EN 379** in your welder's protective shield or helmet.
- Protect other persons in the vicinity of the welding area from UV rays and spatter by suitable, non-flammable partition walls.
- Always wear **safety glasses with side protection** when you are in an area where welding takes place or where slag is removed.

3.3.4. Gases and vapours

CAUTION!

- **All** metal vapours are **harmful to health!**
- Be careful with alloys which contain lead, cadmium, copper, zinc, nickel, chrome and beryllium.

WARNING!

- **Chloric** cleaning and degreasing agents can lead to the formation of the toxic gas **phosgene** due to the decomposition in the arc (risk of suffocation!).

WARNING!

- Risk of poisoning in **narrow** places!

WARNING!

- If shielding gas hoses are not tight or the shielding gas valve gets caught unintentionally, shielding gas may escape to such an extent that the oxygen content of the inhaled air decreases, symptoms of poisoning appear which may lead to unconsciousness and suffocation. (Argon and CO_2 are **heavier** than air).
- Sufficient fresh air must be provided! Please check the gas supplying parts in regular intervals.
- Use fume extraction systems. Pay attention to the national and regional safety regulations.

3.3.5. Fire prevention (explosion)

WARNING!

- Remove all flammable materials around the welding place or cover these with a **non**-flammable or at least **hardly combustible** material.

- Hot slag or spatter might cause fires if in contact with flammable materials.
- Only use shielding gas mixtures suitable for welding consisting of e. g. **Argon, Helium, CO_2** and **O_2**.

DANGER!

Never use flammable gases such as acetylene, propane or pure hydrogen.

CAUTION!

Never weld on drums, tanks, pipes or similar containers unless they have been thoroughly cleaned and prepared according to the relevant national and international standards.

Make sure that no toxic, flammable or explosive vapours can develop.

Ensure that suitable fire-fighting equipment such as water, sand or fire extinguishers are within easy reach.

Confined spaces must have a free passage allowing escape in case of danger.

Please observe the weld area and its surroundings when welding has finished. Fire may break out later due to **smouldering**.

3.3.6. Noise

- Noise may cause permanent damage to your hearing. During welding the admissible noise level might be exceeded under unfavourable conditions.
- Please make sure that the admissible maximum values are not exceeded (Security Administrator).
- If the maximum values are exceeded, a suitable ear protection (earplugs or earmuffs) has to be used.

3.4 Electrical danger due to mains current and welding current

3.4.1. General information

WARNING!

An electric shock can prove fatal. Basically, every electric shock is **extremely dangerous**.

- Do **not** touch live parts within or outside the power source!
- During MIG/MAG welding, the welding wire, the wire coil, the drive rollers as well as all metal parts which touch the welding wire, are live.
- All cables must be tight, undamaged, insulated and sufficiently dimensioned. The negative cable (earth cable) and the positive cable are locked by turning to the right. Loose plugs affect the arc and thus the welding behaviour of the power source to a **considerable** extent.
- Switch the welding machine off when not in use to prevent any electrical risk.
- Avoid contact with metal parts, wear dry, insulating clothing and safety shoes.
- Power sources may only be used when **all** covers are available and correctly installed.

3.4.2. Mains connection

INFO!

The power supply must be installed by **qualified personnel** only!

CAUTION!

Please ensure that the mains voltage to be used is identical to the operating voltage indicated on the machine type plate.

According to the connection regulations the machine has to be fused and connected by means of a mains cable. You will find the connection rules inside the power source after removal of the cover or side panel. The cross section of the connection cable must be adequate.

The machine must be connected to a three-phase four-wire system with earth conductor and operated.

ATTENTION!

Connection to ungrounded networks (e.g. IT networks) or asymmetrically grounded networks is only permitted with an appropriate isolating transformer

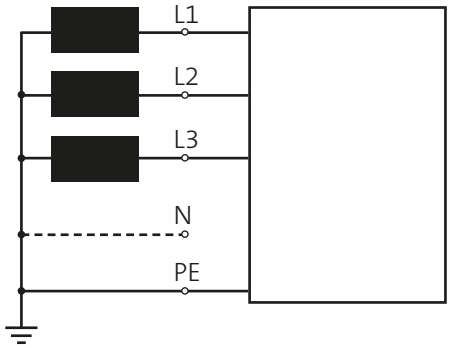

Item	Designation	Colour
L1	Phase conductor 1	brown
L2	Phase conductor 2	black
L3	Phase conductor 3	grey
N	Earth conductor	blue
PE	Protective conductor	green-yellow

CAUTION!

The terminal voltage of the power source can be up to 113 V DC or 48 V AC !

CAUTION!

For welding power sources with multiple connection, observe the corresponding wiring on the main and control transformer (400 V / 480 V / etc.).

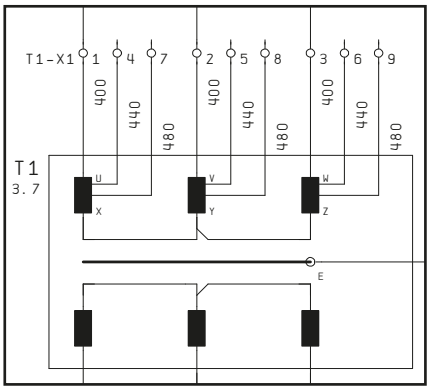

Figure 1. Mains voltage main transformer

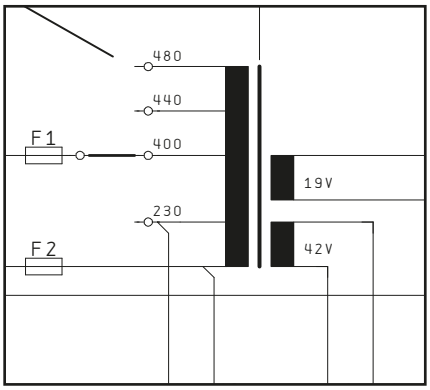

Figure 2. Mains voltage control transformer

ATTENTION!

Although the power source is **"marked S"** for welding in environments with increased electrical hazard, the power source itself must **not** be installed in such places (mains voltage 400V).
Only the welding torch and wire drive unit may be installed and operated in such places.

Depending on the process used, it may happen that there is an addition of the two open circuit voltages between the welding electrodes of **two** power sources. There is possibly the risk of danger to life if both potentials are touched at the same time, see Figure 3.

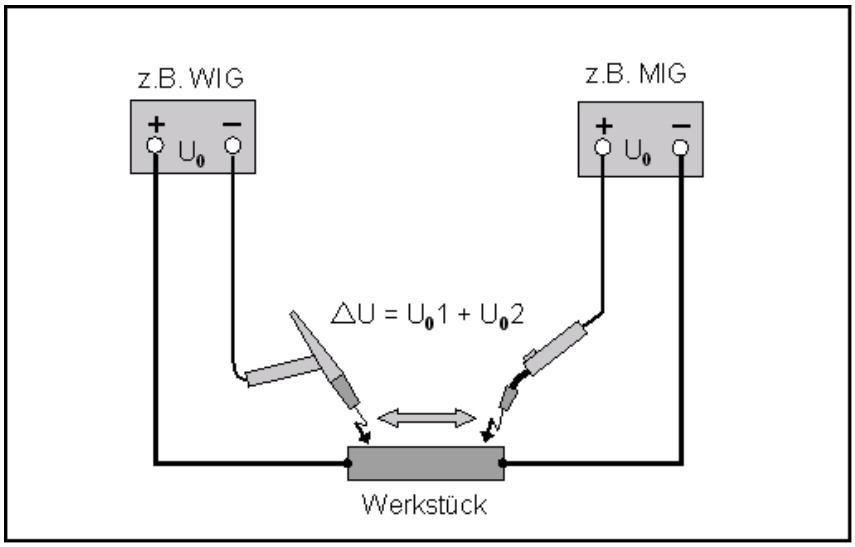

Figure 3. Added open circuit voltages

WARNING!

Electric shocks can be caused when touching the point of the torch (wire) when the open circuit voltage is more than **48 V** and simultaneous skin contact with metal parts at the mass potential of the welding machine. Protective measures by a suitable insulation are absolutely necessary. The open circuit voltage is indicated on the type plate of the welding machine.

3.4.3. Protective conductor

DANGER!

Danger of severe personal injury because of improper mains connection

In the case of improper mains connection of the machine severe shock currents may arise.

In connection with the welding power source the protective conductor may be destroyed by faulty mass connections with earthed welding systems.

- **Make sure that the protective conductor connection is correct and tight! (VDE rules).**
- **The functioning of the protective conductors, the supply network and machine cables must be checked before commissioning and in regular intervals by a skilled electrician.**

It is regarded as **gross negligent** to operate a power source on a supply network without protective conductor. The manufacturer is not liable for damages occurred hereof.

Before working on the power source, switch off the machine and disconnect the mains plug. Please use a warning sign as protection against unintended restart.

A second person should be present for safety reasons if working on voltage-carrying parts is required.

ATTENTION!

The side panels and covers of the QINEO series are **earthed** by means of screws and toothed conical spring washers. The conical spring washers guarantee an electro-conductive connection between the side panel/cover and the housing.

Please make sure that the conical spring washers are correctly re-installed after a removal and reinstallation of the side panels and cover.

3.4.4. Stray welding currents

DANGER!

Under certain conditions, so-called **stray welding currents** may occur during welding.

They may cause the following:

Overheating of components which are connected to the workpiece: Fire risk!

Destruction of protective conductors **(Danger to life!)**.

Damage of power source and other electrical equipment.

The two following figures show an example of the conditions for stray welding currents, see Figure 4 and Figure 5.

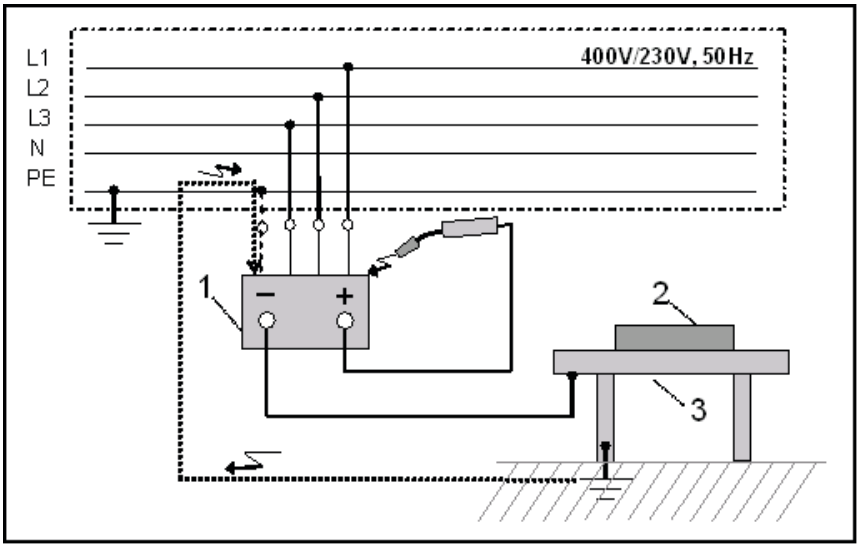

Figure 4. Grounded welding table

1 = Welding power source, **2** = Workpiece, **3** = Welding table (earth connected)

CAUTION!

The welding current flows via the protective conductor of the welding power source if the workpiece or the welding table are provided with an earth connection and the welding torch has contact with the power source housing via the positive pole (wire, current tip). The protective conductor in the mains cable and in the building installation are hereby destroyed.
If possible, use a potential compensating line with a high cross-section!

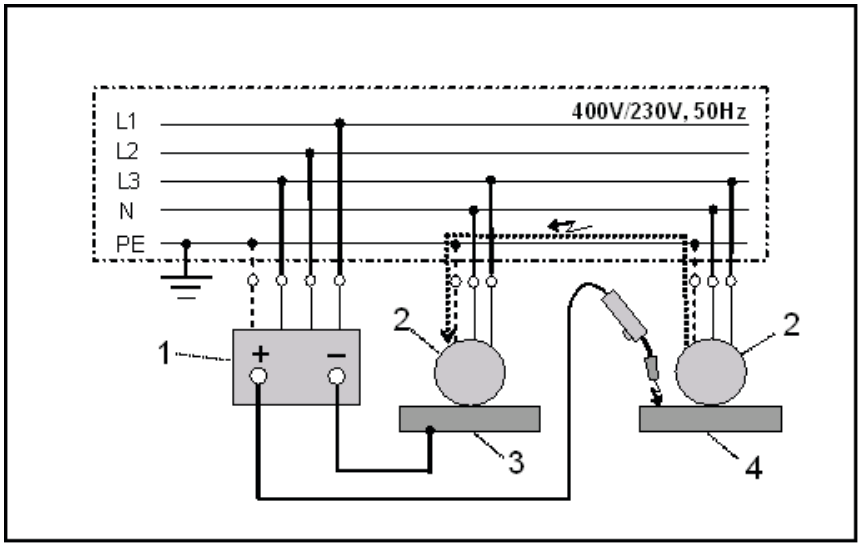

Figure 5. with grounded electronic tools

1 = Welding power source, **2** = Electric tool,
3 = Workpiece 1, **4** = Workpiece 2

CAUTION!

The welding current flows via the protective conductors of the two electric tools, if by mistake welding takes place on tool **4** without having changed connections (earth) of the welding current return line from workpiece **3** to workpiece **4** .
The protective conductor in the mains cable and in the building installation are hereby destroyed.
If possible, use a potential compensating line with a high cross-section!

Please observe the following points to **prevent stray currents**.

- Fasten workpiece clamp as close as possible to the welding spot.
- Please take care that the torch **not** in use is stored with a sufficient insulation.
- Please take care that the torch **not** in use is protected against unintended triggering of the start command.
- Switch off welding equipment which is not in use to avoid electric accidents.

3.5 Particular dangers when MIG/MAG welding

In daily welding practice there are particular danger spots for the user because of the power source configuration and the MIG/MAG welding process.

WARNING!

Keep hands, hair, clothes and tools away from moving parts such as:

- Toothed wheels
- Fans
- Wire coils and welding wires
- Motor shafts of any type
- Please thread the welding wire with utmost caution into the wire feed nozzle !

WARNING!

- Never touch rotating toothed wheels and drive parts of the wire feed unit.
- When the welding wire comes out of the current contact tube it may hurt the hand, the eyes or the face. Therefore, do not turn the MIG/MAG torch to the body when threading the wire.
- Do not release the start key during maintenance work at the torch!
- Do not touch the workpiece before and after welding - Danger of burning. (Warning: Be careful with aluminium - no annealing colours!).
- Covers and side panels must only be opened or removed during maintenance or repair works.

ATTENTION!

- Make sure that during operation all covers and side panels are closed and duly assembled by means of toothed conical spring washers (earthing).
- Before welding is started, make sure that the negative line (earth) is correctly connected to the power source and workpiece (stray welding currents).
- Gas cylinders contain a gas under pressure (200 - 300 bar); in the case of damage, large quantities of expanding gas can suddenly be released. (Kinetic energy → the gas cylinder becomes a missile!).

- Gas cylinders with compressed gas must be protected against heat, mechanical shocks (impacts), open flames, sparks and direct contact with the arc.
- The gas cylinder must always be secured against “falling down”; we recommend to secure it on the cylinder holder of the power source.
- Never move a gas cylinder without protective cap for the valve!
- Please observe the national and international regulations regarding the use of gas cylinders and accessories.

3.6 Safety precautions in daily operation

The power source must only be operated when the safety devices are fully operative.
If the safety devices are not fully operative, this is dangerous for:

- the life and limb of the operator or third persons
- the power source or other property of the owner and operator.

CAUTION!

Never evade safety devices or put them out of action.

- Please check the power source weekly for damages to be seen and check the operativeness of the safety devices.
- Only use the original coolant of the manufacturer if liquid cooled power sources are concerned.
- Only the original coolant is suitable for the CLOOS power sources because of its properties such as electric conductivity, antifreeze compound, material compatibility, protection against corrosion and inflammability.
- Do not mix the original coolant with other coolants to prevent a chemical reaction which could clog the cooling circuit and damage the coolant pump. The manufacturer is not liable for such damages.

Pay attention to the following notes when opening the cooling circuit:
- Bring the welding torch and the torch bracket into a suitable position to avoid an uncontrolled leakage of the coolant, particularly over electric or electronic components.
- Provide a suitable collection tray to collect the coolant.

Xn

Used coolant must be disposed of correctly as hazardous waste in accordance with the official local regulations.
The coolant must **not** enter the normal waste water system!

- Use only original spare and wear parts. Foreign bought spare and wear parts do not guarantee that they have been designed and manufactured strain-proof and in compliance with safety.
- Parts which are not in perfect condition must be exchanged immediately.

ATTENTION!

If the air entrance ports of the power source are provided with **air filter mats**, it should be considered that the **duty cycle** of the power sources reduces in dependence of the increasing degree of soiling of the air filter mat. The **cleaning interval** for the air filter mat must be determined as experience shows because the pollution of the filter mat depends on the ambient conditions. The power sources **must** be operated with air filter mats, if environmental conditions with increased fuses, aerosols, metal dust etc. are concerned. The user must regularly check the degree of soiling of the filter mat. Dirty filters must be replaced!

DANGER!

Oil-contaminated filter mats can cause a fire due to flying sparks (grinding)!

- A **safety check** of the power source is required at least every 12 months. A repeat check must be carried out by a skilled electrician. A check list with the individual points to be checked can be provided by the manufacturer.
- Please observe the national and international standards and regulations regarding the safety check.

4. Environmental circumstances

- The mounting area should be free of dust and aggressive agents.
- The ground should be horizontal and flat (admissible inclination angle max. 10º).
- The distance between power source and environment should at least be **0.50** m to allow the cooling air to circulate unhindered.
- The cooling air inlets and outlets must not be blocked by things such as welder's apron, tissues, drawings, walls etc.

The admissible ambient temperature may vary from **-10°C** to **+40°C.**

Relative air humidity:
up to **50%** at **40°**C (thawing excluded)
up to **90%** at **20°**C (thawing excluded)

The protection class **IP 23** does not allow to install the machine in the rain. If required, the machine must be covered on a large surface. In the process, ensure that the through-flow of cooling air is not impaired.

4.1 Storage

The machine should be stored in a dry and clean room. The ambient temperatures must not exceed -20^{0}C and +45^{0}C.
In case of a longer storage, the machine should be covered with a suitable foil.

4.2 Transport

In principle, the power source may only be transported **without** shielded gas bottle.
The power source can be moved on its wheels. When using a fork lift truck, the forks must be placed between the wheels. The power source must lie diagonally to the moving direction and be completely on the fork.

If a crane is available, **two crane belts** have to be pulled crosswise under the power source inside the wheels.

You have to use a crossbeam, if you want to lift the power source by means of the eyebolts (crane eyelets). The arising mechanical tractions must vertically affect the bolt axis, see label.

For the transport of the machine it is important to adhere to the valid national and regional guidelines and safety regulations in force.

5. Qualification of users

Only persons who have been trained and instructed on the machines in the QINEO series and who have the required qualifications are permitted to carry out work on CLOOS shielding arc welding machines.

INFO!

The manufacturer is not liable for damage to property or persons caused by **unqualified personnel**.

The copyright law for the safety regulations and the operating instruction manual remains with the manufacturer.

Text and photos correspond to the latest status at the time of printing.
The contents of these safety regulations will be adapted to technical developments. Subject to alterations (Issue 03/2018).

Block 2 Basic information Qineo Champ Pro

1. Connection overview welding power source

1	Power switch
2	Operating module
3	Connection socket Negative cable

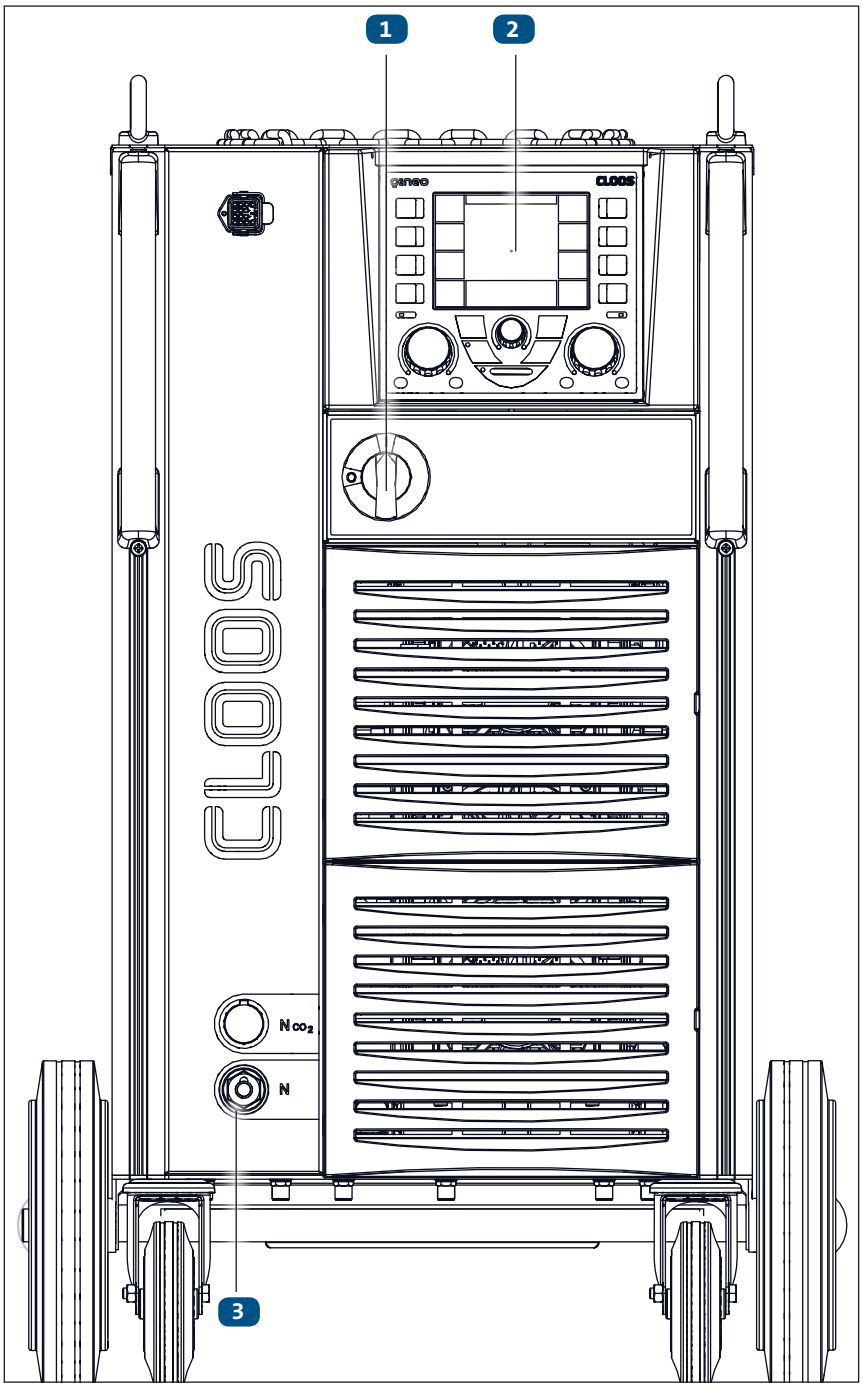

Figure 6. Front view QINEO Champ Pro

1	Connection wire drive
2	Ethernet
3	Welding current bushing
4	Connection designations, see chapter 2.
5	ext. Cooling, optional
6	Tandem, optional
7	Coolant supply and return
8	Mains connection
9	Seam tracking
10	Maintenance access Pump
11	Coolant drain cock
12	Inspection window coolant
13	Coolant filler neck

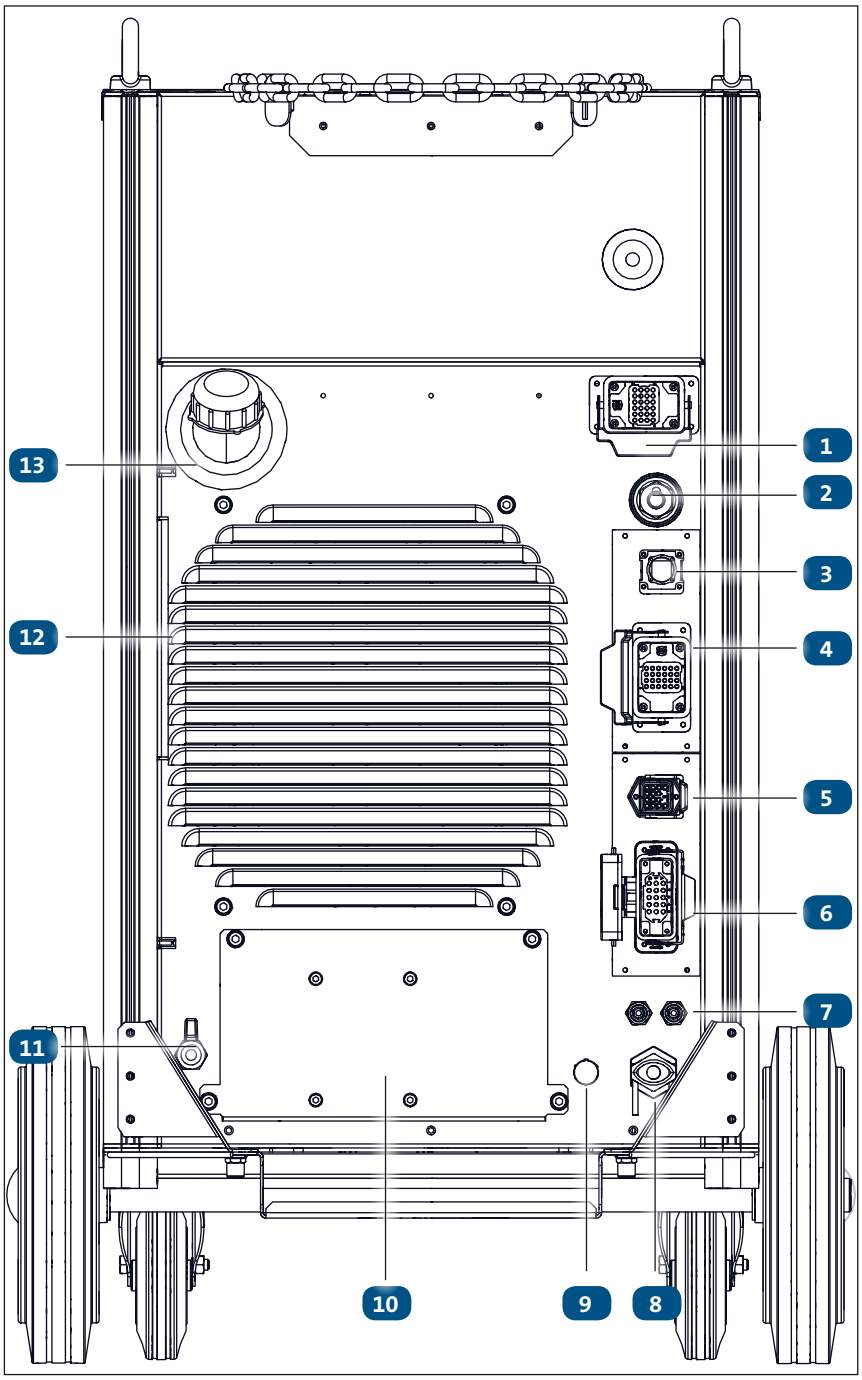

Figure 7. Rear view QINEO Champ Pro

2. Connection overview optional interfaces

Name	Connection	Notes
Ethernet (X77) System plug for: Periphery / CAN (X7) Seam tracking (X33) Gas nozzle sensor (X34)	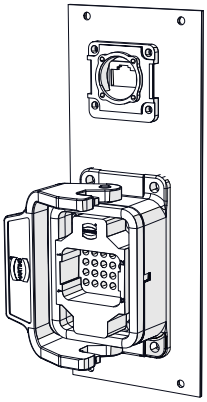	
OMI (X70)	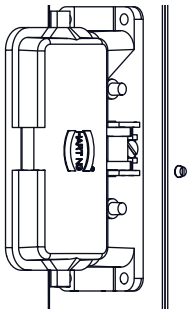	
Tandem / Pulse synchronisation (X32) Qineo Pulse Pro Qineo Champ Pro	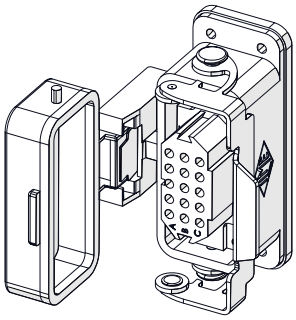	
Standby for external cooling (X40)	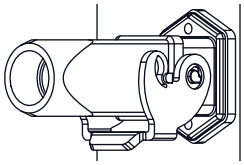	
DeviceNet (X74)	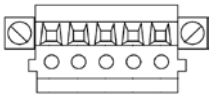	
ProfiBus (X72)	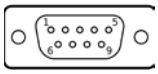	
ProfiNet (X73)		
To guarantee compatibility with old devices:		
Seam tracking (X33)		On request.
Gas nozzle sensor (X34)	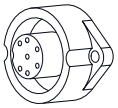	On request.

3. Connection overview QWD- M4

1	Torch cable assembly connection (here: EURO connection)
2	Torch cooling flow
3	Torch cooling return
4	Wire inlet
5	Welding current connection
6	Quick coupling cooling return
7	Quick coupling cooling flow
8	Quick coupling gas
9	Socket to control line
10	Optional connection RC module

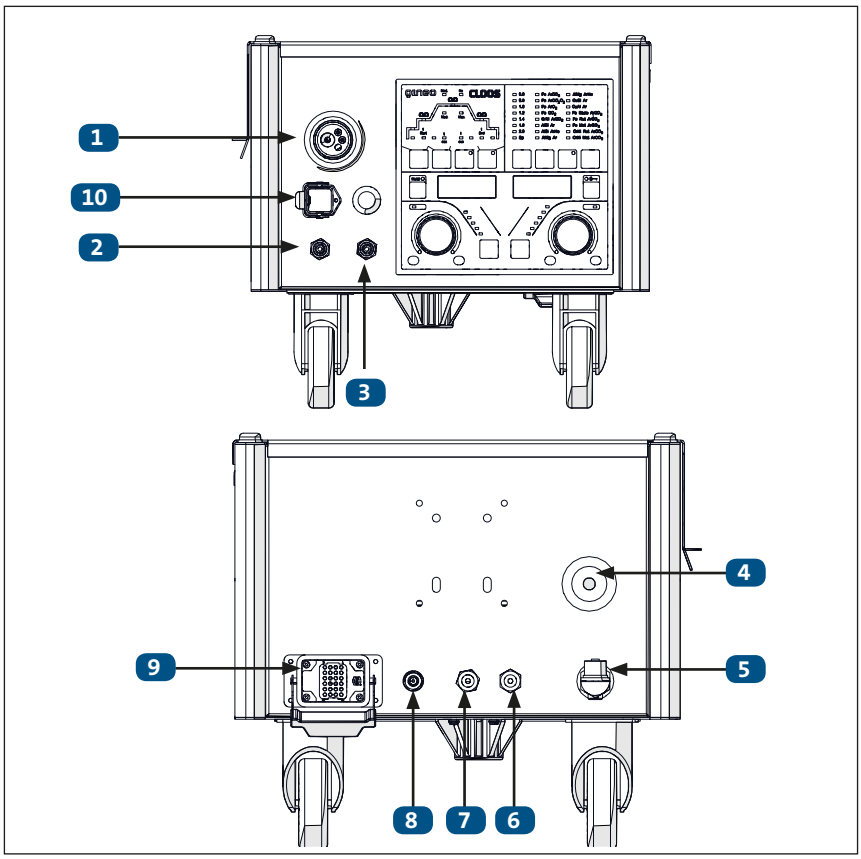

4. Connection overview QWD-A4

1	Torch cable assembly connection (here: EURO connection)
2	"Blow out" connection (for EURO connection)
3	Torch trigger connection (for SZ connection)
4	MCU connection
5	Connection for collision protection, gas nozzle sensor etc.
6	CDD/MD connection
7	Cooling water connection red
8	Cooling water connection blue
12	Power connection
13	Cooling water connection blue
14	Cooling water connection red
15	Gas connection
16	"Blow out" connection
17	Wire end control (optional)
18	Device connection

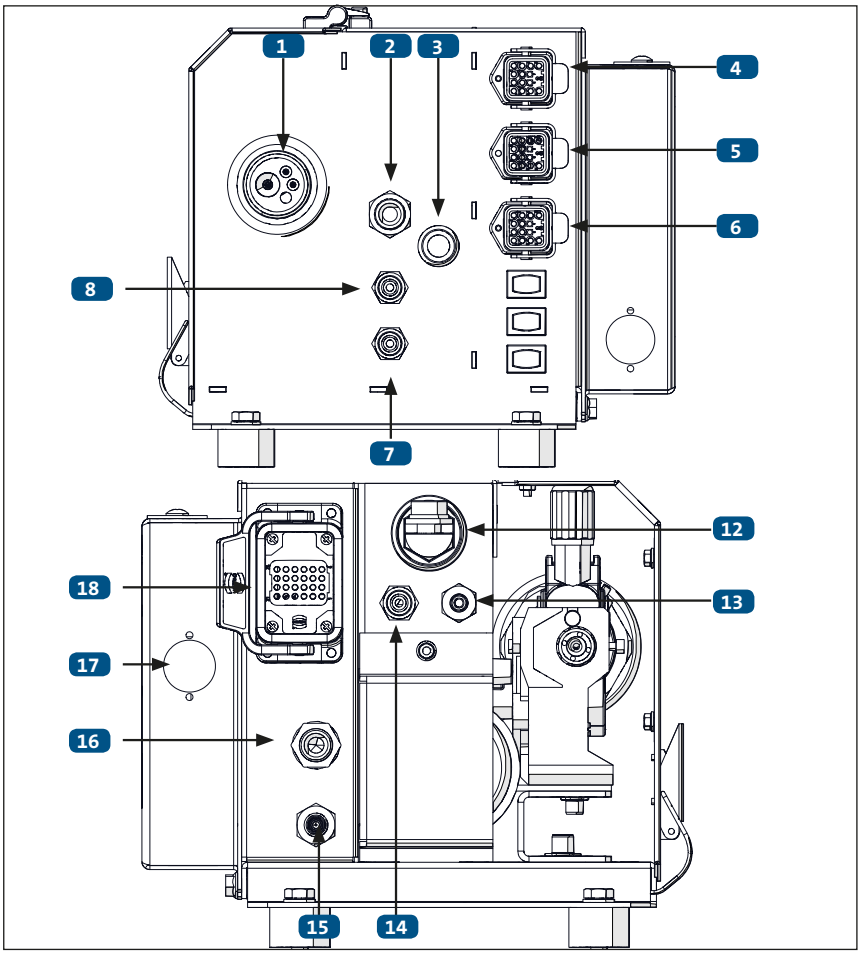

5. Product description

QINEO CHAMP 451, 601 Pro

The machines in the CHAMP Pro series are robust, infinitely adjustable MIG/MAG pulsed arc welding power sources. The power sources work on the basis of pre-programmed synergy characteristic curves. An operation without synergy characteristic curves is possible as well.
The machines are intended for demanding and complex welding tasks in the industrial sector.

Cooling of the power parts is effected by an active cooling via front and rear. The machine is mobile and/or can be transported by means of a crane.

The power sources are provided with an external wire drive unit (QINEO Wire Drive). The installation of the wire coil (D300) is easy and functional. The wire coil support is designed for commercial coils (max. 15 kgs). The PREMIUM user interface with a display provides the required welding adjustments, is ergonomically designed and is sufficiently protected against pollution and damage. The power part and the control are structurally separated to prevent the pollution of the control. The housing is equipped with a gas cylinder support for standard gas cylinders. The connections for the torch cable assembly are located at the front of the QWDM or QWDA wire drive unit. A liquid cooling for the torches is standard in this machine class. As an option the power source can also be supplied as gas-cooled version.

The power sources weld in the short and spray arc range, but they are particularly suitable for the MIG/MAG pulsed arc process and applied for welding thin, medium and thick sheets (3 -12 mm). The Champ CW Pro is operating with AC technology and is therefore particularly suitable for thin sheet applications.
Materials to be welded are: Quality steel, CrNi steel, aluminium (AlMg, AlSi, AlMn) and copper-based materials (CuSi, AlBz).

The power source operates in synergy mode and is provided with a wire fine adjustment and a dynamic mode. The synergy function can be deactivated. The power source has a characteristic curve preselection for gas/material to be welded and wire diameter which is integrated in the operating module. The QINEO CHAMP Pro machine series is provided with the PREMIUM operating module. A language file in the languages German, English, French, Spain and Italian can be loaded for the labelling.
Other languages are available on request.

PREMIUM operating module

The PREMIUM operating module is equipped with a LCD display and offers comfortable and extensive possibilities to display and change all possible functions of the power source.

The DuoPulse function can be selected with the Premium operating module. This function enables to generate a 2nd parameter set. Then it is possible to constantly change between the two parameter sets with a defined frequency.

It is possible to correct the arc length, dynamics, wire inching speed, gas preflow, gas postflow, start time, start power, Up-Slope, Down-Slope, end time, end power and wire burnback.

The power unit is an air-cooled pulsed chopper (MOSFET switching control unit).
Optionally, a remote control can be connected.

As a standard feature, a CLOOS SZ connection is provided as torch connection.
Optionally, an Euro connection or a Dinse connection can be supplied.

The machine has an optional CAN interface to operate/ interrogate various functions in the automation technology.

The QINEO CHAMP Pro can be equipped with a weld data monitoring module.

6. Commissioning

Assembly

A complete machine includes:

1. QINEO CHAMP Pro pulsed arc welding machine
2. QINEO Wire Drive unit
3. Connection cable assembly
4. MIG/MAG welding torch
5. Standard equipment
6. If required, mains voltage cable with CEE plug

The individual components such as MIG/MAG welding machine, possibly cable assembly with wire drive unit, MIG/ MAG welding torch, shielding gas cylinder and reducing valve have to be assembled.
In the case of welding machines with liquid cooling: Insert the plug nipples of the cable assembly into the connection nipples of the power source. The water hoses must not be exchanged. Otherwise this would result in an insufficient cooling of the welding torch. The flow is marked blue!

Fill in the coolant. All water-cooled machines are supplied with a 5 litre container of ready-to-use mixture.

The ground cable is connected to the current connector and locked by turning to the right.
The gas cylinder is placed on the base plate at the rear of the machine and is secured by a chain, which is connected to the holder.

Shielding gas, reducing valve

The reducing valve is screwed onto the gas cylinder and connected to the machine by means of the gas hose. The gas quantity is adjusted at the reducing valve. For this purpose the machine must be switched on and the torch trigger or "Gas manually“ button at the wire drive unit (QWD) must be pressed. This function is designed as a button. If you press this button once, the solenoid valve for the gas flow is opened and the gas flow is interrupted by pressing the button again. This enables you to set the exact gas quantity by means of a gas control cone.

INFO!

The function "Gas manually" is also available on the operating module in the "Functions" menu. For safety reasons, the gas flow is automatically interrupted after 2 minutes.
The shielding gas quantity depends on the process and material and ranges between 8 and 16 l/min.

If the Qineo Champ Pro is connected to a central gas supply system (closed circular pipeline), the reducing insert (bore hole 0.6 mm) in the gas valve must be removed.

Wire drive unit

The wire drive rollers, wire guide unit and wire feed nozzle are marked according to the wire size to prevent a wrong nozzle size being used by mistake. This also applies to the contact tips and liners of the welding torch, which are also marked with the wire sizes.

ATTENTION!

When changing the wire drive rollers and gear wheels, force must not be used to mount them on the gear shafts, e.g. hammer or similar because this might cause damage to the shaft axis.
The welding wire itself is threaded inside the wire drive unit throughout the liner, the wire drive rollers, the wire guide unit and the wire feed nozzle. The power source must now be switched on.

The wire is transported to the torch by motor by actuating the "Wire manually" button.

WARNING!

The wire can also be transported by pressing the torch trigger; in this case, the wire electrode and the contact tip are energised by the complete open-circuit voltage! The wire is also voltage-free in operating mode External.

The pressure roller clips (arms) must only be sufficiently pressed against the pressure unit as is necessary for the relevant wire type and size. The adjustment is reproducible. The pressure roller clips (arms) swing out for threading the wire or exchanging the wire drive rollers. Both pressure units should be set to the same value. The scale value - 3 - should not be exceeded.

The brake of the wire coil holder can be adjusted by means of the tightening screw. The wire coil should not move when the motor brakes to prevent that wire windings fall off the coil and kinking or short circuits occur.

Coolant

The coolant can be filled in the cooling system after having connected the welding torch.

CAUTION!

Always use a coolant approved by CLOOS! It is not allowed to use chlorinated or mineral water because of its electrical conductivity.

Via filler neck the coolant is filled into the storage tank. The tank can be filled up to approx. 90%. After filling a small expansion space should remain to take up coolant which returns from the connection cable assemblies.
The filling level can be checked at the sight glass (indicator) on the left side of the rear.
By opening the drain cock at the rear of the machine the pipe lines are vented and the coolant is brought to the pump.
The water hoses are filled when the pump runs. When using very long cable assemblies, the resulting loss of water in the storage tank must be replenished. Please note the maximum coolant quantity (level)!
The cover must always be screwed down to prevent contamination of the cooling liquid!

ATTENTION!

Water-cooled torches must always be operated with a coolant. Otherwise an overheating or damage of the torch may occur.

ATTENTION!

If a gas-cooled welding torch is operated on a water-cooled welding machine, it is necessary to bridge the water circuit by means of a hose in order to avoid that the water pump is damaged (overheating).

Please note the following if welding machines with cooling liquid are used:

Xn

Used coolant must be disposed of correctly as hazardous waste in accordance with the official local regulations.
The coolant must not enter the normal waste water system!

7. Shutdown / Recycling

According to the Law on Old Electric Appliances, the power source must not be disposed of as domestic waste. According to European directives (Directive 2002/96/EC of the European Parliament and Council dated 27.01.2003) it is no longer allowed to dispose of used electric and electronic units with the unsorted municipal solid waste. They have to be collected separately.

The symbol "Dustbin on wheels" indicates the necessity of waste separation.

In Germany, old appliances from private households can be handed in free of charge at the local collection points of the municipalities. Please contact your municipal administration with respect to the local possibilities.

CLOOS Schweisstechnik participates on an authorised Waste Disposal and Recycling System and is recorded under number WEEE - Reg. No. DE 83919745 in the Register of Old Electronic Appliances.

Returns can be made to CLOOS directly or to any CLOOS sales partner throughout Europe.

8. Technical data

Type: QINEO CHAMP Pro			CHAMP 451 Pro	CHAMP 601 Pro
Ambient conditions				
Operating temperature	°C	-10°C...+40°C		
Storage temperature	°C	-25°C...+55°C		
Humidity		50% at 40°C 90% at 20°C		
Ambient air		Free of unusual dust Free of aggressive media		
Welding range				
			40A/16V-450A/36.5V	40A/16V-600A/44V
EMC				
	Class		A	A
Open circuit voltage				
	(V)		75	84
Data 60% duty cycle				
I2 60% secondary	(A)		450	600
U2 60% secondary	(V)		36.5	44
I1 60% primary	(A)		33.1	53.9
S1 60% primary	(kVA)		22.4	36.3
Data 100% duty cycle				
I2 100% secondary	(A)		350	465
U2 100% secondary	(V)		31.5	37.5
I1 100% primary	(A)		22.4	34.5
S1 100% primary	(kVA)		15.2	23.4
Mains voltage 1				
	(V)		3/PE 400V	3/PE 400V
Fuse 1 (slow or "D")				
	(A)		32	50
Further data				
Connection cable			4x6	4x10
Type of protection			IP23	IP23
Type of cooling			F	F
Insulation class			F	F
Noise emission value in idle running	dB(A)	=< 70		
Dimensions (L x W x H)	(mm)	1226 x 630 x 942		
Weight approx.:	(kg)		204	244
You find the technical data of the wire drive units in block 5 "QWD".				

Block 3 PREMIUM operating module

Contents

1. Operating controls ... 45

2. Main menu ... 46

3. MAIN - Synergy ... 47

4. MAIN - Op. (operating modes) ... 47
4.1 2-cycle ... 47
4.2 4-cycle ... 48
4.3 Super 4-cycle ... 49
4.4 Spot welding ... 49
4.5 External ... 49

5. MAIN process ... 50
5.1 Electrode ... 50
5.2 TIG ... 50
5.3 Speed Pulse ... 50
5.4 Pulse ... 50
5.5 MIG/MAG Normal ... 50
5.6 Syn off ... 51
5.7 Processes with the appendix CW (Cold Weld) ... 51
5.7.1 S-Pulse CW ... 51
5.7.2 Normal CW ... 52
5.8 Rapid Weld ... 52

6. MAIN - Function ... 53
6.1 DuoPulse ... 53
6.2 CleanStart ... 53
6.3 Blow through ... 53
6.4 Wire forward ... 54
6.5 Wire backward ... 54
6.6 Gas manually ... 54
6.7 Start manually ... 54

7. MAIN - Progr. (Programming) ... 55
7.1 Parameters in the operating modes 2-cycle and 4-cycle ... 57
7.2 Parameters in the operating mode Super-4-cycle ... 57
7.3 Parameters in operating mode Spot Welding / Interval ... 59
7.4 Setting ranges ... 60
7.4.1 Input of setting ranges ... 60
7.4.2 Prerequisite to use the setting ranges ... 61
7.4.3 Deactivating the setting ranges ... 63
7.5 MAIN - Programming - Tandem ... 63
7.6 MAIN - Programming - Pulse synchronisation ... 63
7.7 "Expert Mode" (single parameter mode) ... 64
7.7.1 Main parameters in the "Expert Mode" ... 64
7.7.2 Secondary parameters in the "Expert Mode" ... 65
7.7.3 "DuoPulse parameters" in the "Expert Mode" ... 66

8. MAIN - Measured values ... 67
8.1 Operating data ... 67
8.1.1 Data set switching 1/2 ... 68
8.1.2 Seam counter Setup ... 69
8.1.3 Consumption costs ... 70

9. MAIN - Display ... 70

10. MAIN (2) - Config (Configuration) ... 72

10.1 Config - General 72
10.1.1 Display brightness 72
10.1.2 MHW 405 TQ 72
10.1.3 Control coolant pump and fan 73
10.2 Config - General (2) 73
10.3 Config - General (3) 74
10.3.1 Config - General - Basic settings 74
10.3.1.1 Config - General - Basic settings - Tandem 76
10.3.1.2 Config - General - Sense technology 76
10.3.1.3 Config - General - QWD 77
10.3.2 Config - General - SD module 78
10.3.3 Config - General - Options 78
10.4 Config - Water monitoring 80
10.5 Config - Compensation 81
10.6 Access rights 83
10.6.1 Config - Access management 83
10.6.2 Config - User management and PAK (option) 85
10.6.2.1 Config - User management - Options 87
10.6.2.2 Config - User management - User overview 88
10.6.2.3 Config - User management - User overview - PAK 90
10.7 Config - PC adaptation 91
10.8 Config - Clock 91
10.9 Config - Process monitoring 92

11. MAIN (2) - Diagnostics 93
11.1 Diagnostics Cooling 94
11.2 Diagnostics Software versions 94
11.3 Diagnostics I / 0 (Inputs and Outputs) 95
11.4 Diagnostics VBC module 96
11.5 Diagnostics QWD 97
11.6 Diagnostics PC adaptation 98
11.7 Diagnostics Tandem 98
11.8 Diagnostics pulsed arc synchronisation 99
11.9 Diagnostics System logbook 99
11.9.1 Diagnostics Robot (from x.11.30 on) 101

12. MAIN (2) - Language 102

13. MAIN (2) - Data backup 103
13.1 Copy job to SD memory card 103
13.2 Read job from SD memory card 104
13.3 Copy characteristic curve to SD card 104
13.4 Read characteristic curve from SD memory card 104
13.5 Copy configuration data to SD memory card 104
13.6 Read configuration data from SD memory card 104

14. User log on/off 105
14.1 MAIN (2) - Log on 105
14.2 MAIN (2) - Log off 105

15. Job mode 106
15.1 Save job 106
15.2 Overwrite an existing job 107
15.3 Copy a job 107
15.4 Activate job 108

1. Operating controls

The PREMIUM operating module with its enhanced range of functions meets the most demanding requirements for a practice-oriented, convenient operation. A 320 x 240 pixel LCD colour display with function buttons on the side enables simple operation even when programming extensive welding tasks.

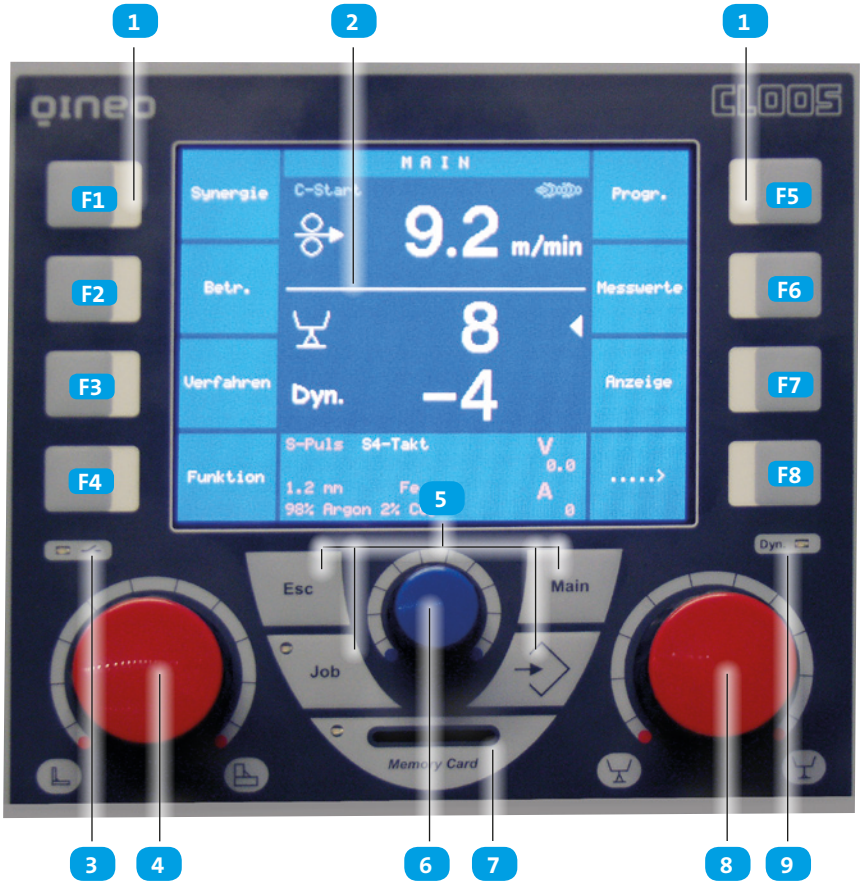

Figure 8. Premium operating module, general view

Item	Description
1	Function keys F1-F8
2	Colour LCD display
3	LED (arc start)
4	Rotary knob 1 (power/wire speed)
5	Keys (Esc, MAIN, job, job selection)
6	Rotary knob 3 (parameter adjustment)
7	Slot for SD memory card
8	Rotary knob 2 (fine adjustment ArcLength/ArcDynamic)
9	LED (ArcDynamic)

2. Main menu

In the main menu (MAIN) you can call the following functions by means of the function keys F1-F8:

MAIN (1) active			MAIN (2) active			MAIN (3) active		
Key	Function	Page	Key	Function	Page	Key	Function	Page
F1	Synergy	Page 47	F1	Configuration	Page 72	F1	Weld data monitoring	Page 113
F2	Operating mode	Page 47	F2	Diagnostics	Page 93	F2		
F3	Processes	Page 50	F3	Language	Page 102	F3		
F4	Function	Page 53	F4	MAIN (1)		F4		
F5	Progr	Page 55	F5	Data backup	Page 103	F5		
F6	Measured values	Page 67	F6	Log on	Page 105	F6		
F7	Display	Page 70	F7	Log off	Page 105	F7		
F8	MAIN (2)		F8	MAIN (3)		F8		

Rotary knob 1
Always use rotary knob 1 to set the wire speed/power. The maximum wire speed depends on the application.

- Manual welding max. 24 m/min
- Automated welding max. 30 m/min

Rotary knob 2
Use rotary knob 2 to set the most important electrical parameters depending on the process. Depending on the selected process, the parameters voltage, frequency or the arc length and dynamics are selected.

Rotary knob 3
Use rotary knob 3 to select further welding relevant parameters depending on the process.

Definition arc length

INFO!

- 0 -	The welding current is exactly on the characteristic curve.
-	The wire speed is reduced, the arc becomes longer.
+	The wire speed is increased, the arc becomes shorter.

Definition Dynamics
By turning the rotary knob 2 the operator can influence the shape of the arc.

- In the positive setting range the arc becomes concentrated and smaller.
- In the negative setting range the arc becomes softer and wider.

INFO!

During the normal MAG process the shape of the arc is influenced in the dynamic range. In the Rapid Weld process, the penetration shape and depth can be influenced with the dynamic setting.

3. MAIN - Synergy

Processes	Normal, S-Pulse, Pulse etc. according to characteristic curve data set
Material	Fe, CrNi1.4316, AlSi, AlMg, AlMg4,5 Mn, CuSi, CuAl, Fe Basis, Fe Rut, Fe Met
Wire	0.6; 0.8; 0.9; 1.0 ;1.2 ;1.4 ;1.6; 2.0; 2.4 (mm)
Gas	82 % argon, 18 % CO2 91 % argon, 4 % O2, 5 % CO2 92 % argon, 8 % CO2 90 % argon, 10 % CO2 95 % argon, 5 % CO2 100 % argon 97.5 % CO2, 2.5 % CO2
Variant	Standard

Other gas mixtures are possible!

4. MAIN - Op. (operating modes)

The welding power source provides the following operating modes:

- 2-cycle
- 4-cycle
- Super 4-cycle
- Spot welding/Interval
- External

4.1 2-cycle

Operating mode 2-cycle is provided for short manual welds.

1st cycle --> Press torch trigger

- Solenoid valve for shielding gas opens
- Welding voltage is applied on wire electrode
- Wire drive unit starts with reduced speed (inching-in)
- Arc ignites, welding current flows
- Wire drive unit switches to the preset wire speed

2nd cycle --> Release torch trigger

- Wire drive unit stops
- Welding voltage is switched off after expiration of the "burnback time"
- Arc extinguishes
- Solenoid valve closes after expiration of the "gas post-flow time"

4.2 4-cycle

Operating mode 4-cycle is provided for longer manual welds.

1st cycle --> Press torch trigger

- Solenoid valve for shielding gas opens
- Welding voltage is applied on wire electrode
- Wire drive unit starts with reduced speed (inching-in)
- Arc ignites, welding current flows
- Wire drive unit switches to the preset wire speed

2nd cycle --> Release torch trigger

- Execution of start program and upslope, if required
- Welding process continues with the adjusted main parameters

3rd cycle --> Press torch trigger again

- Downslope and end crater program, if required

4th cycle --> Release torch trigger again

- Wire drive unit stops
- Welding voltage is switched off after expiration of the "burnback time"
- Arc extinguishes
- Solenoid valve closes after expiration of the "gas post-flow time"

4.3 Super 4-cycle

Operating mode Super-4-cycle is provided for longer standard manual welding tasks. The detailed operating possibilities are described in chapter "7. MAIN - Progr. (Programming)".

1st cycle --> Press torch trigger

- Solenoid valve for shielding gas opens
- Welding voltage is applied on wire electrode
- Wire drive unit starts with reduced speed (inching-in)
- Arc ignites, welding current flows
- Wire drive unit switches to the preset wire speed

2nd cycle --> Release torch trigger

- The start program is executed with the adjusted parameters and then switches via a programmable time function (Upslope) to the main program.

3rd cycle --> Press torch trigger again

- The end crater program is executed with the adjusted parameters.

4th cycle --> Release torch trigger again

- Change from main parameter to the end parameter via a time function (Downslope), the end parameter time is executed.
- Wire drive unit stops
- Welding voltage is switched off after expiration of the "burnback time"
- Arc extinguishes
- Solenoid valve closes after expiration of the "gas post-flow time"

4.4 Spot welding

The spot function allows spot welding for a defined time. After pressing the torch trigger, the controller automatically stops the welding process after expiration of the defined time.

The welding process is immediately stopped if the torch trigger is released during the spot time.

The detailed adjustment possibilities are described in chapter "7. MAIN - Progr. (Programming)". You can select a spot time of 0-99.9 sec.

4.5 External

This function is intended for automated or robotic operation. The various signals are selected via the automation interface of the welding power source.

5. MAIN process

5.1 Electrode

All commercially available stick electrodes can be welded in conjunction with the "Electrode" process. If the "Electrode" process is selected, "Aset" appears in the display. The displays for wire diameter and material thickness are masked out. You can now select the required welding current by means of rotary knob 1. Press rotary knob 1 to switch on the open circuit voltage. The blue LED "ARC on" lights up, see Page 45. Press rotary knob 1 again or change to another process to switch off the open circuit voltage. If the internal characteristic curve is missing or defective, the process name is displayed in red.

5.2 TIG

The TIG process provides a TIG welding function (continuous current).

For this purpose a special adapter is required. This process is provided with a Lift-Start ignition.

In program mode, you can adjust the times for gas pre-flow and post-flow as absolute values in seconds (0...99.9). Use rotary knob 1 to select the welding current. The displays for wire diameter and material thickness are masked out.

5.3 Speed Pulse

In the "SpeedPulse" mode, the regulator settings are chosen in such a way that a hard and stable pulsed arc arises. The SpeedPulse arc is particularly suitable for high welding speeds. The welding current depends on the distance between torch and workpiece. Arc seam tracking is possible in connection with the QIROX robot controller. This pulse process is suitable for sheet thicknesses of more than 2-3 mm.

5.4 Pulse

In the "Pulse" mode, the regulator settings are chosen in such a way that a soft, stable pulsed arc arises without further fine adjustment (arc length and dynamics). The arc exerts less pressure on the liquid weld pool. The welding current does not depend on the distance between torch and workpiece. The pulsed arc is particularly suitable for thin sheets (1 mm and more). In connection with the QIROX robot controller, arc seam tracking is possible depending on the material. This pulse process is suitable for sheet thicknesses of more than 1 mm.

5.5 MIG/MAG Normal

This is a pulse-free MIG/MAG welding process with synergy function.

5.6 Syn off

In this process, you set the parameters wire speed (rotary knob 1) and welding voltage (rotary knob 2) manually. All other basic data and secondary parameters are provided by the synergy characteristic curve.

5.7 Processes with the appendix CW (Cold Weld)

INFO!

Processes with the appendix CW are welding processes in connection with A/C power technology.

The use of positive and negative half-waves allows to modify the power input into the workpiece during the welding process. Due to a time extension of the negative half-wave it is possible to input less power into the material. The higher the negative share, the less power is input into the basis material. Since the half-wave shifting and the selection of the pulse shape require very complex control settings, these settings are only allowed in synergy mode. The operator selects the power with rotary knob 1 and with rotary knob 2 the arc length and the negative share of the alternating current. All other parameter settings required are done by means of the control processor. This enables MIG/MAG pulse welding of thin sheets in the range of approx. 0.5 mm - 3.0 mm.

5.7.1 S-Pulse CW

In the "S-Pulse CW" mode, the regulator settings are chosen in such a way that a concentrated and stable pulsed arc arises. The S-PULSE CW arc is particularly suitable for high welding speeds. The welding current depends on the distance between torch and workpiece. In connection with the QIROX robot controller, arc seam tracking is possible to a limited extent. The AC part in the CW process is set by means of the rotary knob for the dynamics setting, see Figure 9. This pulse process is suitable for sheet thicknesses from 0.5 mm - 3.0 mm.

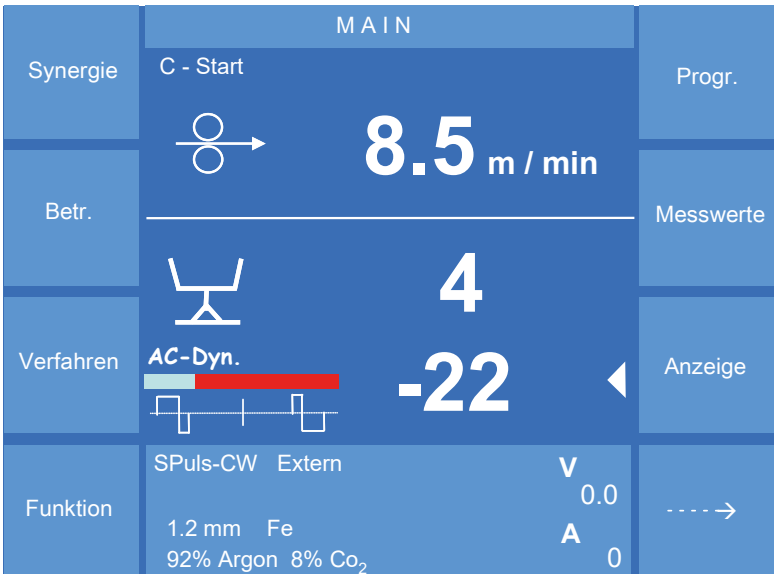

Figure 9. Display with half-wave shift

5.7.2 Normal CW

This is a MIG/MAG welding process without pulse but with synergy function. The welding current depends on the distance between torch and workpiece. In connection with the QIROX robot application, arc seam tracking is possible to a limited extent. This welding process is suitable for sheet thicknesses from 0.5 mm - 3.0 mm.

5.8 Rapid Weld

The Rapid Weld process generates a very concentrated arc during the welding process, which guarantees a very deep penetration.

The following characteristic curves are available as Rapid Weld variant:

- Normal, Fe, 92 % Ar, 8 % CO_2, wire 1.0 mm
- Normal, Fe, 92 % Ar, 8 % CO_2, wire 1.4 mm
- Normal, Fe, 82 % Ar, 18 % CO_2, wire 0.8 mm
- Normal, Fe, 82 % Ar, 18 % CO_2, wire 1.0 mm
- Normal, Fe, 82 % Ar, 18 % CO_2, wire 1.2 mm
- Normal, Fe, 82 % Ar, 18 % CO_2, wire 1.4 mm
- Normal, Fe, 82 % Ar, 18 % CO_2, wire 1.6 mm
- Normal, Fe, 91 % Ar, 4 % O_2, 5% CO_2, wire 1.2 mm
- Normal, Fe, 91 % Ar, 4 % O_2, 5% CO_2, wire 1.4 mm
- Normal, Fe, 91 % Ar, 4 % O_2, 5% CO_2, wire 1.6 mm

INFO!

To activate the Rapid Weld characteristic curve, you have to select one of the above mentioned characteristic curves and the variant 1 M or Rapid Weld at the PREMIUM operating module.

(Main/Synergy/Variant --> variant 1 M).

6. MAIN - Function

INFO! The display field is highlighted yellow if one function is active.

Figure 10. Menu functions

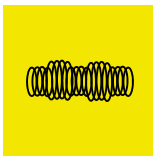

6.1 DuoPulse

If the function is active, a second welding parameter is generated from the set basic value, which is higher or lower than the basic value.

By means of a defined frequency there is a switch-over between the two parameter sets. The appearance of the weld seam surface can be formed by the defined change of parameters. During root welding, defined cool-down times can be reached depending on the setting. The "DuoPulse" function is available for all gas/material combinations. If the "Expert Mode" function is active, further parameters are available there, see ""Expert Mode" (single parameter mode)" on page 64

6.2 CleanStart

Clean Start is a special ignition routine which ensures a reliable and low spatter arc ignition. The complete ignition routine runs in the millisecond range. This results in an exceptionally low spatter ignition process.

6.3 Blow through

With this function the blow through valve gas/air in the QWD wire drive is manually operated.

This function is only active as long as the button is pressed.

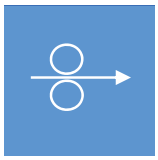

6.4 Wire forward

With this function the wire feed is switched on manually.

This function is only active as long as the button is pressed.

6.5 Wire backward

This function is used to manually retract the wire electrode.

This function is only active as long as the button is pressed.

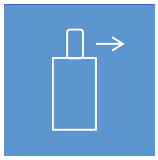

6.6 Gas manually

The function is used for an exact setting of the gas flow (gas control cone, pressure reducer).

With this function the gas valve is switched on manually.

The function is activated/deactivated by a short key press. If the button is pressed for more than 0.5 s, the function is only active as long as the button is pressed.

6.7 Start manually

This function triggers a manual start command.

In the lower part of the display, the Hold value is shown for approx. 10 s (yellow points).

This function is only active as long as the button is pressed.

7. MAIN - Progr. (Programming)

The welding power source always uses the existing synergic characteristic curves. The values for all secondary parameters, including "CleanStart", are already preset in the synergy characteristic curves.

Activate the "Programming" function to enter the programming mode. In this menu the default values can be adjusted.

The correction is only an offset which is added to the characteristic curves. The original characteristic curve is not changed. It can always be reset to the original state (display "- 0 -").

In programming mode, the following display concept applies:

Yellow	= time
Green	= m/min, step size
Red	= power

In the programming mode, you can access the next or previous parameter by shortly tapping on the arrow buttons. A graphic display is integrated for better orientation.

Above the graphic display the current parameter, the correction factor and the absolute numerical value with the corresponding physical dimensions are displayed. Depending on the selected parameter, the display may differ from the example shown in Figure 11.

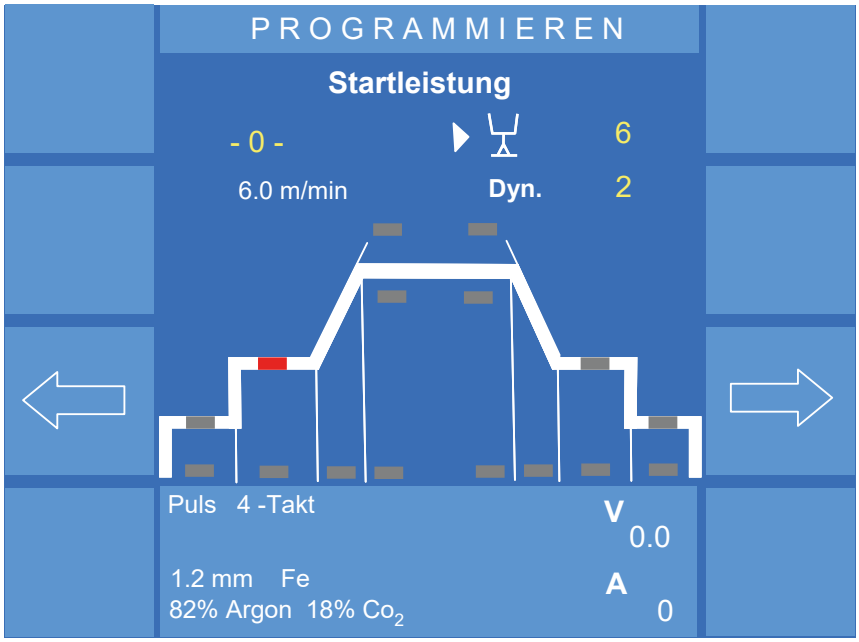

Figure 11. Programming menu

The correction value is entered by means of the rotary knob 3. The changed parameters are saved simultaneously and do not have to be saved additionally.

INFO!

During the Job mode, the job has to be saved again! If you did not save the correction values in a job, the settings of the last selected characteristic curve are lost!

The numerical values are dimension-free correction values and no absolute numerical values. The absolute numerical value with the corresponding physical size is shown in a separate line, see example Figure 12.

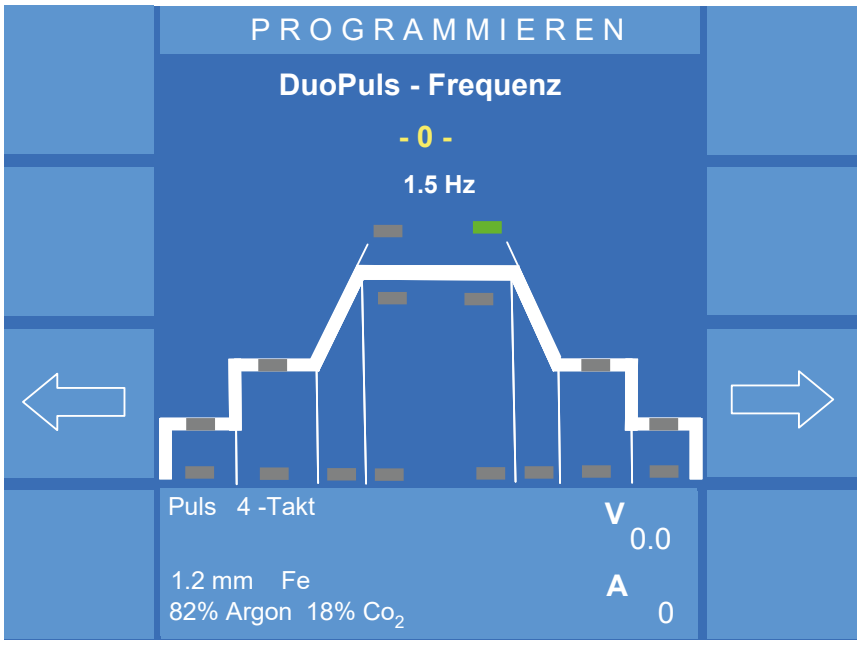

Figure 12. Menu programming correction -0-

When times are corrected (yellow LED), an "OFF" is displayed after "-99". The function (e.g. Start program) is switched off if "OFF" is displayed.

All correction values are reset to "- 0 -" as soon as another gas/material combination or another wire diameter is selected.

7.1 Parameters in the operating modes 2-cycle and 4-cycle

Function	Correction value
Gas pre-flow	Off, +/- 99
Inching-in	+/- 99
Start program (time)	Off, +/- 99
Start program (power)	+/- 99
Upslope	Off, +/- 99
Main power	Absolute value (m/min)
DuoPulse modulation*	(+/- 99)
DuoPulse frequency*	(+/- 99)
Downslope	Off, +/- 99
End crater prog. (Time)	Off, +/- 99
End crater prog. (Power)	+/- 99
Wire burnback	+/- 99
Gas post-flow	Off, +/- 99

* Display only if the function is selected!
As far as start, main and end crater power are concerned, the ArcLength and ArcDynamics can be entered in addition.

7.2 Parameters in the operating mode Super-4-cycle

Function	Correction value
Gas pre-flow	Off, +/- 99
Inching-in	+/- 99
Start program (time)	Off, +/- 99, tor
Start program (power)	+/- 99
Upslope	Off, +/- 99
Main power	Absolute value (m/min)
DuoPulse modulation*	+/- 99
DuoPulse frequency*	+/- 99
Step modulation	+/- 9.9
Number of steps.	Step (0 - 10)
Downslope	Off, +/- 99
End crater prog. (Time)	Off, +/- 99
End crater prog. (Power)	+/- 99
Wire burnback	+/- 99
Gas post-flow	Off, +/- 99

As far as start, main and end crater power are concerned, the ArcLength and ArcDynamics can be entered in addition.

Change of start time:
Turn rotary knob 3

- No time, after "-99" --> "OFF"
- Torch, after "+99"--> "tor"

The start time is determined by means of the torch trigger if "tor" is displayed.

Step modulation
The welding practice often requires working with different main parameters. The power continuation is ensured by shortly pressing the torch trigger (< 0.5 sec).

Use the function "Step modulation" to determine the step width of the increase or the reduction of the wire speed or power per keystroke (Step).

A maximum wire speed change of 9.9 m/min per step is permitted!

Number of steps
Use the function "Number of steps" to determine the maximum number of steps.

Max. 10 steps are possible. When the max. number of steps has been reached, the wire speed per torch keystroke reduces by the adjusted step modulation.

DuoPulse
All operating modes allow to switch on the "DuoPulse" function. (Menu "functions", "DuoPulse"). If the "Expert Mode" function is active, further parameters are available there, see Page 64.

DuoPulse modulation
A second weld parameter set can be generated by means of the "DuoPulse" function. Based on the set basic value, a second weld parameter can be generated which is higher or lower than the basic value.

By means of a defined frequency there is a switch-over between the two parameter sets. The appearance of the weld seam surface can be formed by the defined change of parameters. During root welding, defined cool-down times can be reached depending on the setting. The "DuoPulse" function is available for all gas/material combinations.

The characteristic curve is already provided with a 2nd parameter set which is useful for welding. The display shows "- 0 - "and a corresponding value for the wire speed in m/min. If you want to deviate from the base setting, use the rotary knob 3 to enter a value between -99 and +99. The appropriate absolute value changes as well.

DuoPulse frequency
This function is used to change the switching speed (frequency) of both parameter sets.

The characteristic curve is already provided with a useful frequency for welding.

The display shows "- 0 - "and an appropriate value for the frequency in Hz. If you want to deviate from the base setting, use the rotary knob 3 to enter a value between -99 and +99. The appropriate absolute value changes as well.

7.3 Parameters in operating mode Spot Welding / Interval

If the operating mode "Spot welding" is active, you have to enter the values for the parameters "Spot welding time" and "Pause time" (sec).

Function	Correction value
Gas pre-flow	Off, +/- 99
Inching-in	+/- 99
Start time	Off, +/- 99, tor
Starting power	+/- 99
Upslope	Off, +/- 99
Main power	Absolute value m/min
DuoPulse modulation*	+/- 99
DuoPulse frequency*	+/- 99
Step modulation	+/- 9.9 m/min
Number of steps	Off, 1-10
Downslope	Off, +/- 99
End crater filling time	Off, +/- 99
End crater power	+/- 99
Wire burnback	+/- 99
Gas post-flow	Off, +/- 99
Spot welding time	Absolute value 0-99.9 sec
Interval time	Absolute value 0-99.9 sec

* Display only if the function is active!

A "Spot welding time" between 0...99.9 s can be selected with rotary knob 3.

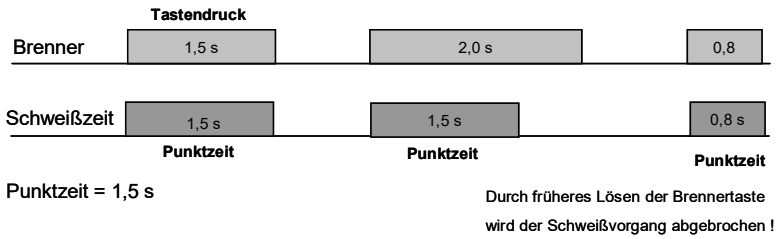

Figure 13. Spot welding time

By tipping the arrow button on the right, you can enter the "Pause time".

If you enter a "Pause time", the interval function is started.

"Spot welding time" and "Pause time" are added and result in the "Interval time".

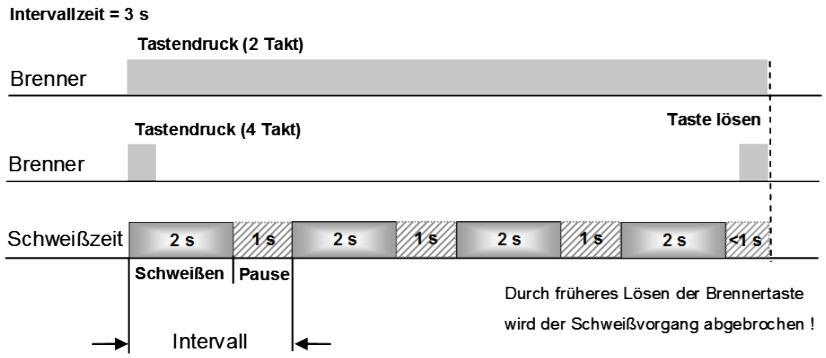

Figure 14. Interval time

7.4 Setting ranges

Setting ranges can be defined for starting power, main power and end crater power.

Prerequisite for configuring the setting ranges is the "Access management" or the optional "User management", see section "10.6 Access rights" on page 83.

7.4.1 Input of setting ranges

In order to be able to input the setting ranges you have to log on as "Configurator" ("MAIN (2)" - "Log on").

The setting ranges are input on the page "MAIN" using the "Progr." function, see Figure 15.

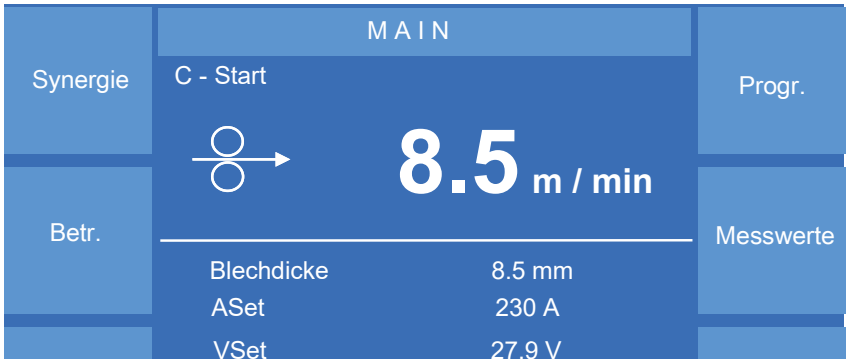

Figure 15. MAIN key Programming

Use the arrow buttons to select the start, main or end crater power. The "Setting range" function appears, see Figure 16.

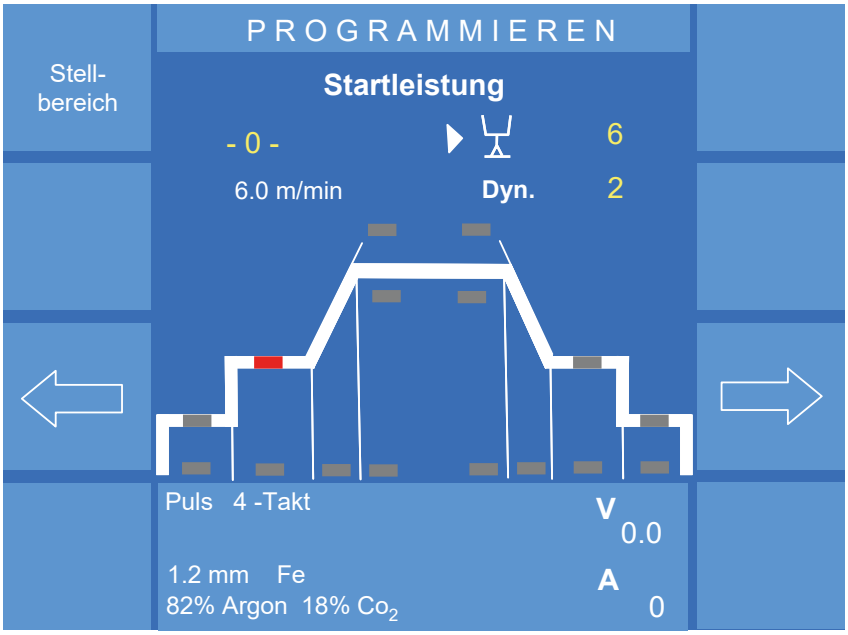

Figure 16. Key F1 Setting range

After pressing the key "Setting range", the following appears.

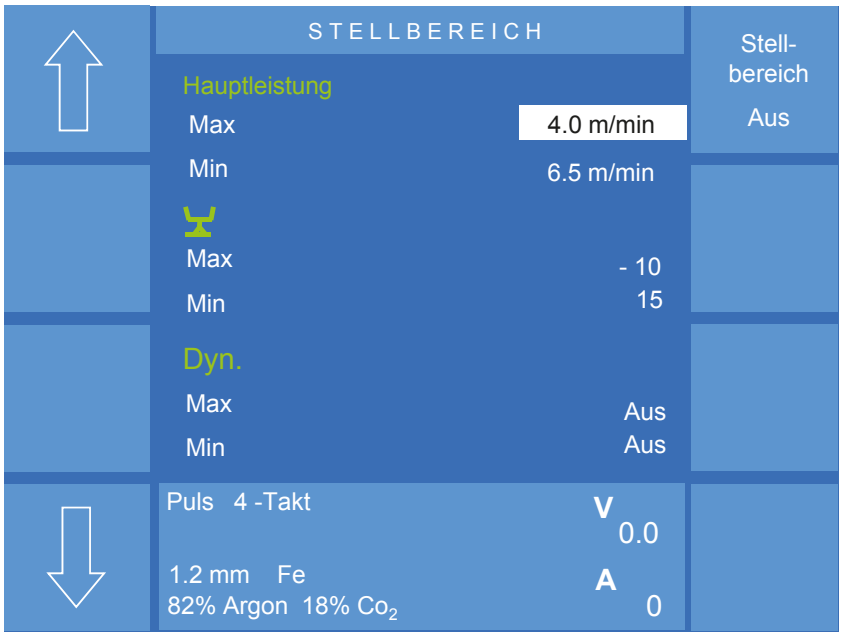

Figure 17. Setting range

Since the synergy characteristic curves already comprise predefined parameters , the minimum and maximum values for the start power and the end crater power are entered as correction factor (-99 to +99).

The minimum and maximum main power are entered depending on the display setting in the "MAIN" menu, see Page 70. The limit values can be displayed in m/min or V and A.

The values are input by means of the middle rotary knob. The active input range is highlighted with a white field. Use the arrow keys to jump to the next or previous input position.

Use the "Setting range Off" function to set the selected range to "Off". You will return to the "MAIN" menu by pressing the "Esc" key or by pressing again the rotary knob 3.

7.4.2 Prerequisite to use the setting ranges

As soon as setting ranges are configured, they are available for the "Programmer" or "Automatic" operating levels.

Activating the setting ranges for the "Automatic" operating level

To use setting ranges in the "Automatic" operating level, the following settings must be activated:

- If the "Fine enable" function is active in the "Config - Access management/User management - Options -> Rotary knob" menu, the setting ranges for Arc length and Dynamics are active.
- If the "Power/Fine enable" function is active in the "Config - Access management/User management - Options -> rotary knob" menu, the setting ranges for Arc length and Dynamics and also the setting ranges for Power are active, see Figure 18. All other adjustment parameters are blocked.

Figure 18. "Config"- "Access management" - "Options" menu

Once the setting ranges have been configured and activated, the message "LIMIT" appears in the "MAIN" menu, see Figure 19.

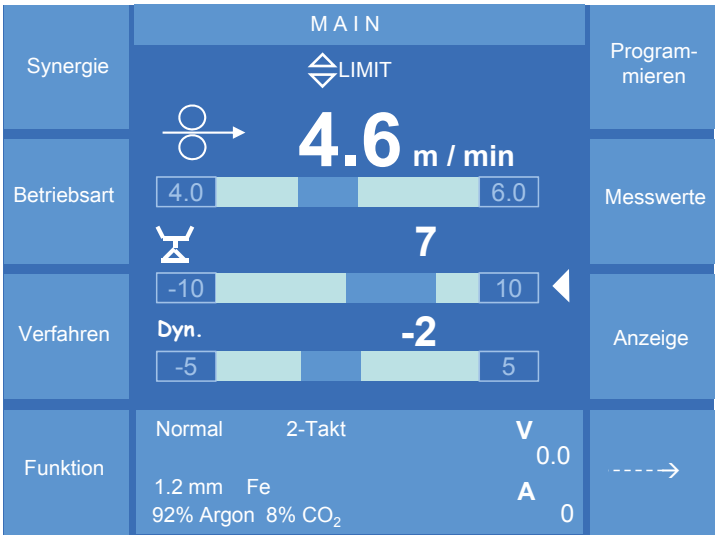

Figure 19. Activated setting ranges

7.4.3 Deactivating the setting ranges

Select the "Progr." function from the "MAIN" page. Use the arrow keys to select the appropriate start, main or end crater power. The display shows the "Setting range" function.

After activating the "Setting range" function, the following view appears.

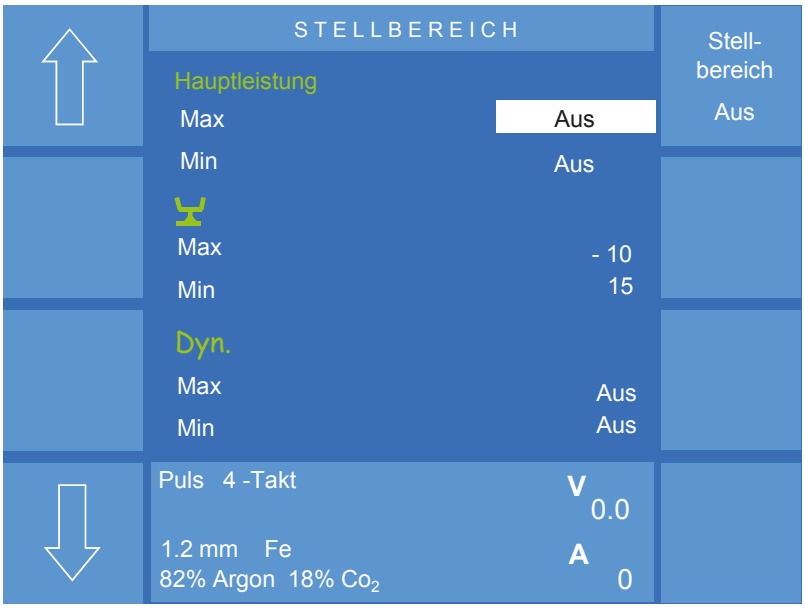

Figure 20. "Programming"- "Setting range" menu

Use the "Setting range Off" function to set the selected range to "Off", see Figure 20.

You will return to the "MAIN" menu by pressing the "Esc" key or by pressing again the rotary knob 3.

7.5 MAIN - Programming - Tandem

For further information and prerequisites for configuring the Tandem operating mode, see section "Basic configuration Operating mode "Tandem"" on page 169.

INFO! If the "Expert Mode" function is active, the function is under MAIN - Programming(2).

7.6 MAIN - Programming - Pulse synchronisation

For further information and prerequisites for configuring the Pulse synchronisation function, see section "Pulse synchronisation" on page 178.

INFO! If the "Expert Mode" function is active, the function is under MAIN - Programming(2).

7.7 "Expert Mode" (single parameter mode)

The "Expert Mode" is an alternative operating possibility to the synergy mode. The "Expert Mode" requires a fundamental knowledge of the pulsed arc welding process and is only recommended for users having a good experience in welding.

INFO! When the "Expert Mode is "active, the background of the text field is highlighted in yellow. In synergy mode the text field is blue.

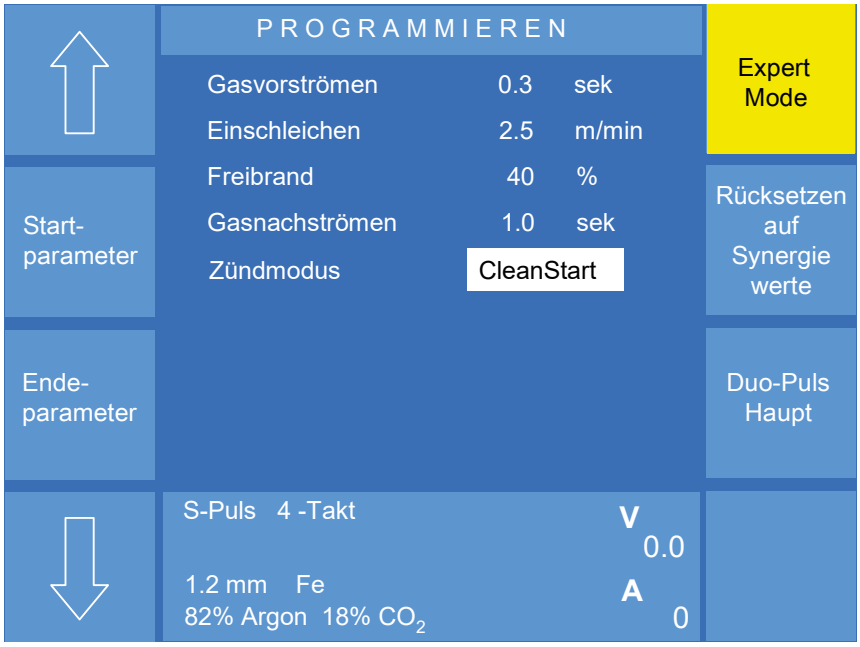

Figure 21. "Programming" "Expert Mode" function active menu

INFO! The operation in "Expert Mode" is not possible without a correct characteristic curve!

As the processor in the welding power source is in charge of further parameter and regulator settings for the "Expert Mode", the selection of a convenient characteristic curve is indispensable.

To edit the parameters from the synergy characteristic curve in the "Expert Mode", press the button "Reset to synergy values" in the "Expert Mode" menu. Only then all parameters have been transferred to the "Expert Mode".

INFO! If there is a change between Synergy mode and "Expert Mode", the changed parameters are retained in the respective mode.

The secondary parameters are set by means of rotary knob 3. To select the individual parameters, you can press the rotary knob or use the up and down arrow keys.

7.7.1 Main parameters in the "Expert Mode"

For setting the main parameters, use the "MAIN" or "Esc" buttons with active "Expert Mode". You are now in the "MAIN" menu.

Always use rotary knob 1 to set the wire speed.

Use rotary knob 2 to set the most important electrical parameters depending on the process. Depending on the selected process, the parameters voltage, frequency or the arc length are selected.

Use rotary knob 3 to select further welding relevant parameters depending on the process. By pressing rotary knob 3 you reach the next parameter, see Figure 22.

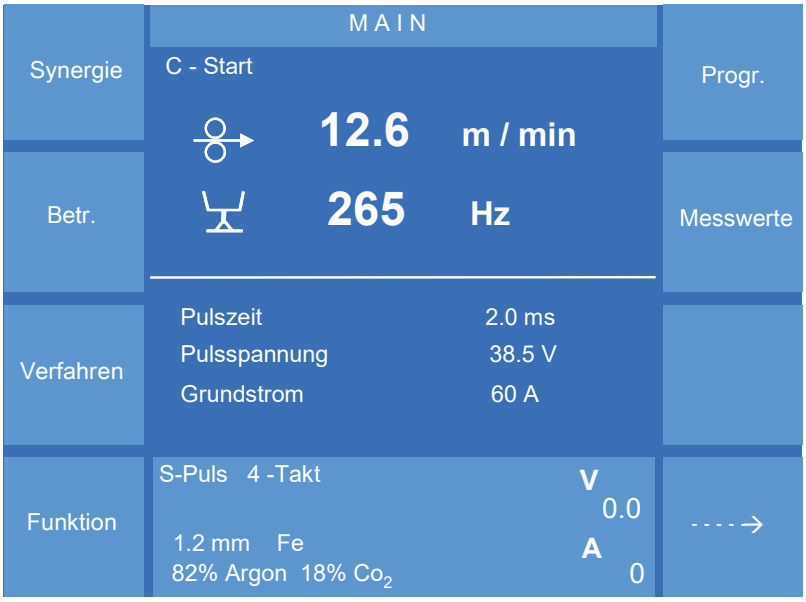

Figure 22. "MAIN" "Expert Mode" function active

7.7.2 Secondary parameters in the "Expert Mode"

Depending on the process, the following secondary parameters are available:

Parameters	MAG Normal	Pulse	S-Pulse
Time (duration)	x	x	x
Upslope	x	x	x
Wire speed			
Downslope	x	x	x
Gas pre-flow	x	x	x
Gas post-flow	x	x	x
Inching-in	x	x	x
Ignition mode	x	x	x
Voltage	x		
Choke	x		
Burnback	x	x	x
Inclination	x		
Arc length		x	
Pulse frequency		x	x
Base current		x	x
Pulse time		x	x
Pulse current		x	
Pulse voltage			x

7.7.3 "DuoPulse parameters" in the "Expert Mode"

INFO!

DuoPulse is not an independent pulsed arc welding process but only a changing between two parameter settings.

If the "Expert Mode" function is active, the "DuoPulse parameters" function is available for the start, main and end program in the "PROGRAMMING" menu.

DuoPulse		
On	Off	
DP mode		
Energy	Wire/Energ	Wire
In the position "Energy" the 2nd parameter set is generated by the parameters which can be selected in the display (depending on the process).	In the position "Wire/energ" the 2nd parameter set is generated from all 2nd parameters which are shown in the display.	In the position "Wire" the 2nd parameter set is generated only by modifying the wire speed.
DP frequency:		
The selected frequency is used to switch between the selected original parameters and a 2nd parameter set so that an almost pulsating arc is produced.		

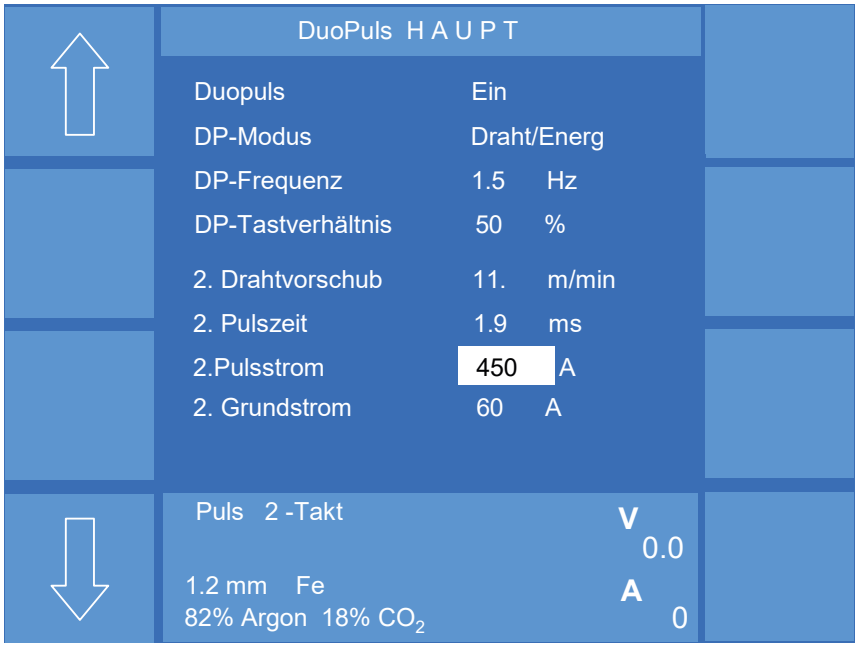

Figure 23. "DuoPulse parameters" for "Vari Weld" process

8. MAIN - Measured values

In the "Measured values" menu, the most important welding relevant values are displayed.

Figure 24. Menu measured values with switched on Hold function

The displays V (Volt) and A (Ampere) show the voltage and current actual value during the welding process.

The "Hold" function switches the display for V or A from ACTUAL values to Hold values. The Hold value display shows the averaged values for the last weld.

Different parameters are shown, depending on the selected process and the sensors used. The example in Figure 24 shows the pulse process.

8.1 Operating data

For the cost control and calculation purposes, the menu "Measured values" provides the submenu "Operating data". Before determining the consumption costs, the current values for wire weight, wire costs, gas costs and energy costs must be entered in the "Cost rates" menu item.

The numerical values are selected by means of rotary knob 3. By pressing the rotary knob 3, you can modify the adjustment speed (x10, x100, x1000).

INFO!

Meaningful operating data can only be collected in conjunction with the optional SD sensor in the wire drive. The operating data can be displayed on the operating module or evaluated in conjunction with the "QDM" software and stored on an external data carrier.

Use the arrow keys to switch between the individual input points. After entering the data you can quit the menu by means of the "Esc" key.

For orientation purposes please find below some welding wire weights. These weights may vary in practice and have to be checked by means of a precision balance for an exact determination of the weight.

The weight specifications refer to 1 m welding wire.

Steel solid wire (1 m)	
0.8 mm	4.0 g
1.0 mm	6.2 g
1.2 mm	8.9 g
1.6 mm	15.8 g

Aluminium solid wire (1 m)	
1.0 mm	2.1 g
1.2 mm	3.1 g
1.6 mm	5.4 g

CuSi solid wire (1 m)	
1.0 mm	6.7 g
1.2 mm	9.6 g
1.6 mm	17.1 g

Steel flux-cored wire (1 m)	
Metal powder	
1.2 mm	8.4 g
1.6 mm	15.0 g
Rutile	
1.2 mm	7.2 g
1.6 mm	12.8 g
Alkaline	
1.2 mm	7.5 g
1.6 mm	13.3 g

8.1.1 Data set switching 1/2

This function enables you to show the consumption data in two separate displays. In one of the displays you can determine long-term consumption periods while in the second display you can observe at the same time shorter periods - e.g. a weld seam. You can switch between views 1 and 2 using the "Data set switching 1/2" function.

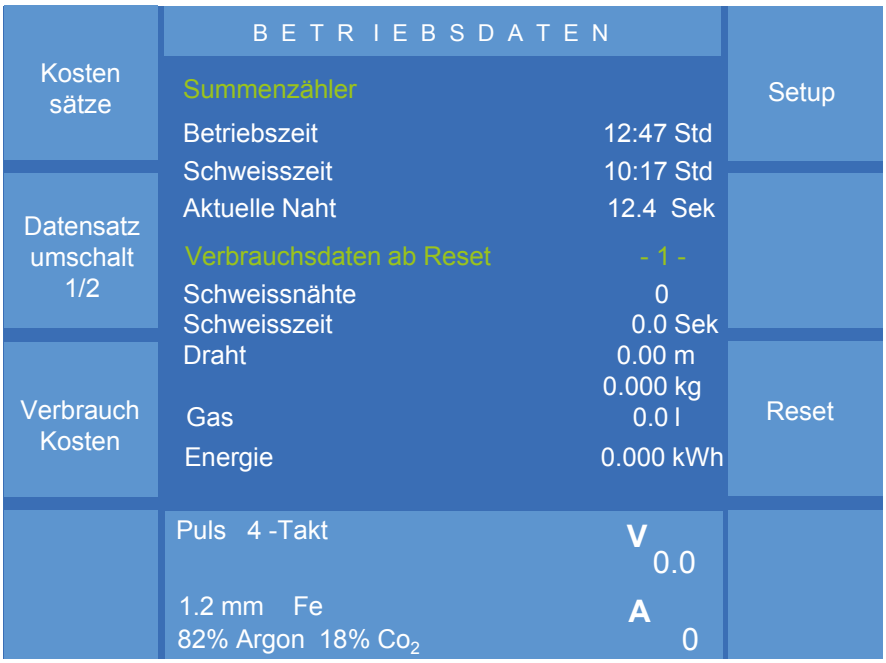

Figure 25. Operating data

8.1.2 Seam counter Setup

In this menu you set the duration of the “Arc on” signal which is necessary to increase the seam counter by one.

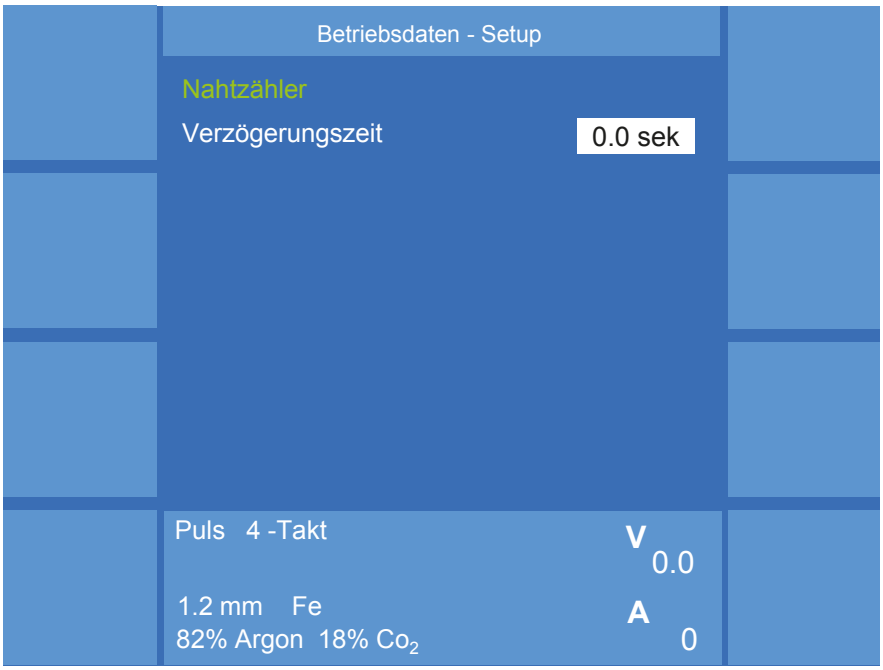

Figure 26. Delay time seam counter

8.1.3 Consumption costs

This function shows the costs for the number of weld seams, wire, gas and energy.

Figure 27. Consumption costs

The cost analysis is started by means of the "Reset" function or is reset to 0.

9. MAIN - Display

This function enables switching between different display versions.

Version 1

In addition to the reference variable "Wire speed", the parameters "Sheet thickness", "Aset" and "Vset" are displayed. In addition, the parameters "ArcLength" and "ArcDynamic" are shown, see Figure 28.

The 3 parameters "Sheet thickness", "Aset" and "Vset" serve as orientation to select suitable welding parameters. Due to the synergy characteristic curves used, the parameters for the "Sheet thickness", "Aset" and "Vset" are calculated on the basis of the wire speed value.

- The "Sheet thickness" display shows the possible sheet thickness to be welded. It can only be used as a rough reference to determine the correct parameters. The sheet thickness refers to a fillet weld.
- The display "Aset" shows the welding current to be expected. Since this is a calculated value, the real welding current may differ from the pre-announcement!
- The display "Vset" shows the welding voltage to be expected. Since this value has been calculated, the real welding voltage may differ from the display!

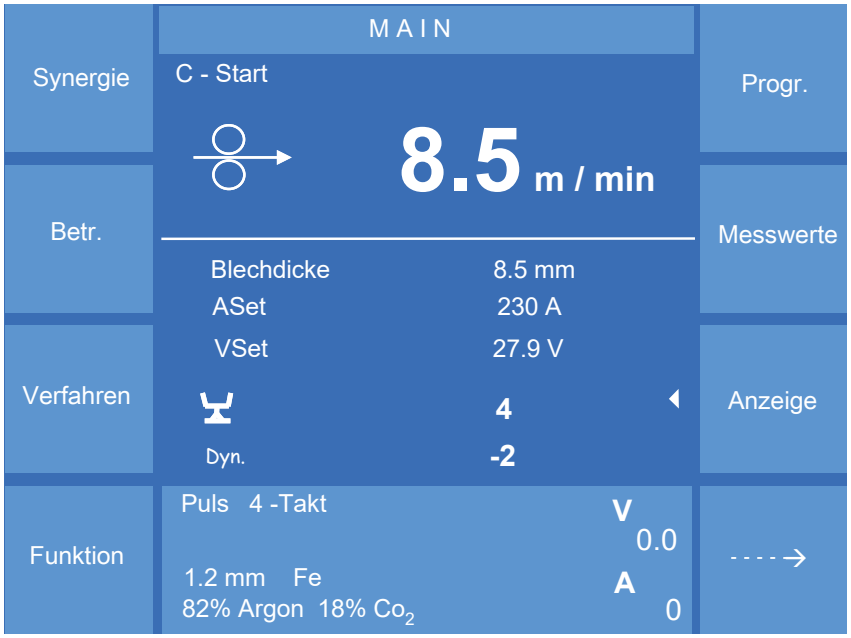

Figure 28. Display variant 1

Version 2

In the lower part of the display appears a zoomed version of the values "ArcLength" and "ArcDynamic", see Figure 29.

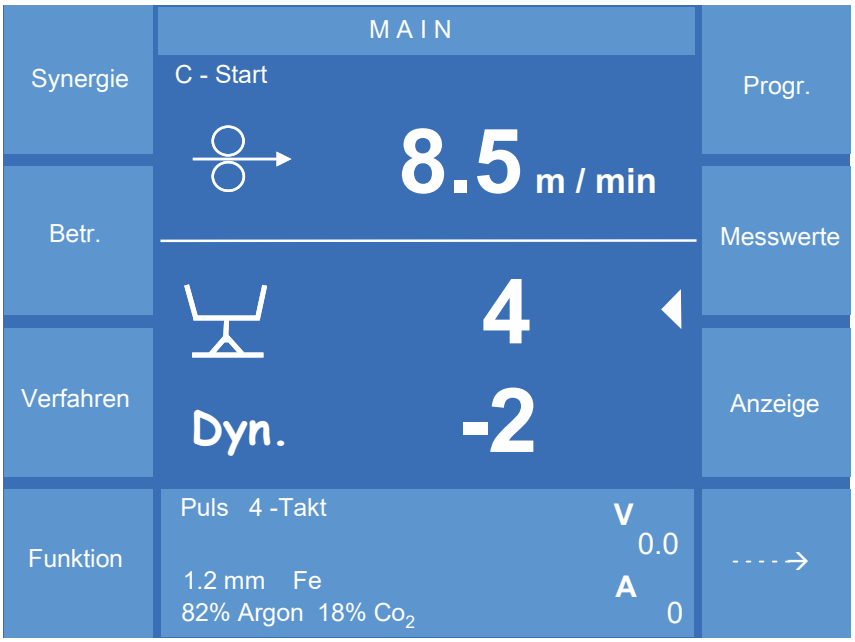

Figure 29. Display variant 2

Version 3

If you are in Job mode, the "Job number" and "Job name" are displayed instead of "ArcLength" and "ArcDynamic".

10. MAIN (2) - Config (Configuration)

From the MAIN(1) display, you can access the MAIN(2) display by pressing the "-->" key. Then press the "Config" function.

10.1 Config - General

Use the arrow symbols to switch between the individual menu items.

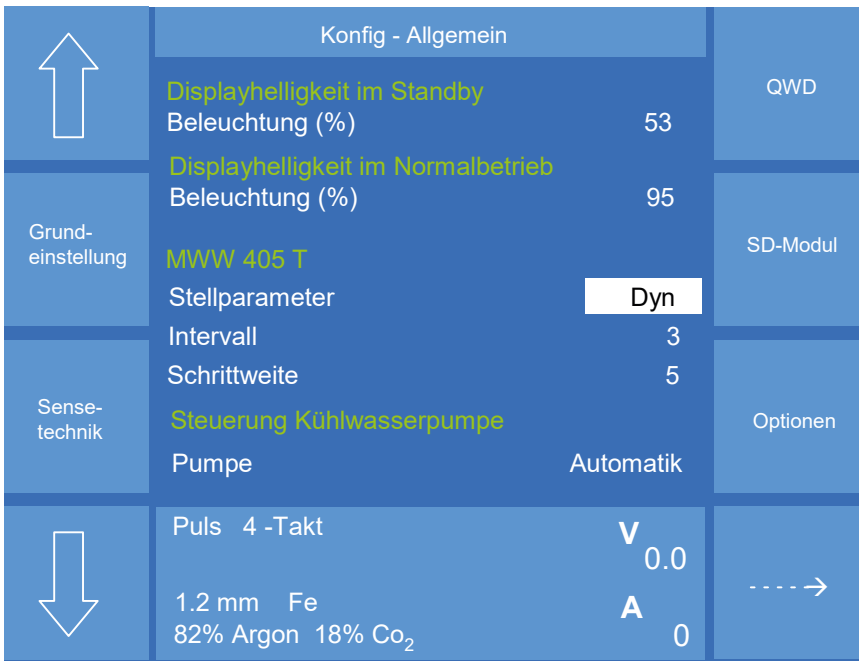

Figure 30. Menu Config general

10.1.1 Display brightness

You can change the values by means of rotary knob 3.

Standby	If there is no entry via the operating module for more than 10 minutes, the brightness of the display will be reset to the given brightness value (%).
Normal operation	This parameter is used to adjust the brightness of the display during normal operation (%).

10.1.2 MHW 405 TQ

Herewith one of the following parameters is defined for the additional torch triggers.

Function	Description
Setting parameters	The setting parameters "Power", "Fine" (arc length), "Dynamics" and "Job" can be activated and varied by the torch triggers during the welding process. Except for the "Job" setting parameter, the interval and step size can be adjusted on the operating module. If the "Job" setting parameter has been selected, the step size is automatically set to 1.

Function	Description
Interval	Using this function, you set the speed of the parameter change released by the torch trigger. The adjustment is between 1 ... 10. The correction value is 100 ms each.
Step width	Using this function, you set the size of the parameter change released by the torch trigger. The adjustment is between 1 ... 20. The correction value is 0.1 m/min each for the "Power" and 1 % each for the "Fine" and "Dynamic" parameters.

10.1.3 Control coolant pump and fan

ATTENTION!

If an external cooling is connected, make sure that it is recognised by the welding power source. The functions described here are then transferred to the external cooling.

Function	Description
Automatic	Depending on the thermal load, the calculator of the welding power source controls the running time of the cooling pump and the fan.
On	As soon as the main switch of the welding power source is switched on, the cooling pump and the fan start their continuous operation. The pump and the fan only turn off if the welding power source is switched off.
Off	The pump and the flow monitoring are switched off.

The menu is quit by pressing rotary knob 3!

10.2 Config - General (2)

Figure 31. Config General (2) menu

In this menu item you can:

- Select the dimension display for the wire speed.
- Select whether the display shows the process voltage (terminal voltage minus values of the external welding current circuit = calculated voltage at the workpiece) or the terminal voltage (voltage at the welding power source).
- Determine the minimum and maximum limit values for the "Gas-Yes-Signal" in litres.

10.3 Config - General (3)

Figure 32. Config General (3) menu

In this menu item you determine the minimum and maximum value that a welding torch equipped with a potentiometer can achieve in the TIG welding process.

10.3.1 Config - General - Basic settings

Figure 33. Premium Config_Basic settings

In this menu, the basic settings for the use of the welding power source are made.

Start/End program in 2-cycle mode
For welding applications it is often not required to use start and end crater programs (e.g. frequent spot welding).

Therefore, you have the option to switch off this function. You can choose between the settings "On" and "Off". This modification becomes only effective when the characteristic curve is called up again.

External control

- **Number of control voltages**

Name	Function
"0"	• If the robot shall only set the job number, but no other parameters.
"2"	• If the robot shall set the two parameters “Arc length” and “Power”.
"3"	• If the robot shall set the three parameters “Arc length”, “Power” and “Dynamics”.

- **External process selection**

Name	Function
"Off"	• If two different processes are executed at the same time with a Tandem torch. • If variants of synergy characteristic curves are used. • If a correction value for Upslope or Downslope was set and the robot changes the process during operation. The correction value is also taken over for the following process! If you do not want this behaviour, we recommend to change the process via a job change.
"On"	• If the robot shall pre-set the welding process.

- **Qirox parameters**

Name	Function
"Off"	• If the welding power source shall pre-set the welding parameters. Necessary if no other welding parameters shall be transferred from the robot to the welding power source during job operation. The values for "Number of control voltages" and "External process selection" have an indirect influence on these parameters and can be set separately.
"On"	• If the robot shall pre-set the welding parameters.

Fine adjustment variant
This menu item offers the "Arc fine adjustment" by means of a synergy characteristic curve or the wire speed.

Name	Function
“Wire”	• With this setting the arc length is corrected via the adaptation of the wire speed. Longer arc = less wire speed Shorter arc = higher wire speed
“Characteristic curve”	• With this setting the wire speed remains constant. The arc length is adapted by moving the operating points on the synergy characteristic curve. The wire speed is not changed.

Polarity "+/-" connection
Function only available with AC welding power sources.

Name	Function
"Standard"	• Positive pole on welding torch
	• Negative pole on welding torch Recommended when changing to a TIG welding torch or when using special stick electrodes.

Reset to factory setting
Press and hold (>3 seconds) the function "Reset to factory settings" in order to reset all settings in the configuration menu and the job 0 to the pre-set default values. After the Reset, the text will be highlighted yellow.

10.3.1.1 Config - General - Basic settings - Tandem

Define in this menu item whether the welding power source shall be "Master" or "Slave" during Tandem operation. Read more information in chapter "Basic configuration Operating mode "Tandem"" on page 169.

10.3.1.2 Config - General - Sense technology

In order to monitor the welding process, the terminal voltage is measured on the welding power source and the voltage is measured close to the welding process (torch).

These Sense lines have an immediate effect on the regulator settings of the welding process. Thus, the sense technology supervises a differential voltage between the torch and the connections on the welding power source. This function is only active during the "MAG Normal" process!

If the differential voltage exceeds a certain value, e. g. interruption of the external welding current circuit, this would result in not controllable parameter settings.

If a defined differential voltage is exceeded, the system - for safety reasons - immediately switches over to the terminal voltage of the welding power source in order to prevent uncontrollable parameter settings.

Sense technology On/Off
Mode: On or Off

Sense technology Differential voltage
Difference: 0.0 V...40.0 V

If the adjusted voltage is exceeded, the error message "Err. 25 Sense voltage exceeded!" appears on the display.

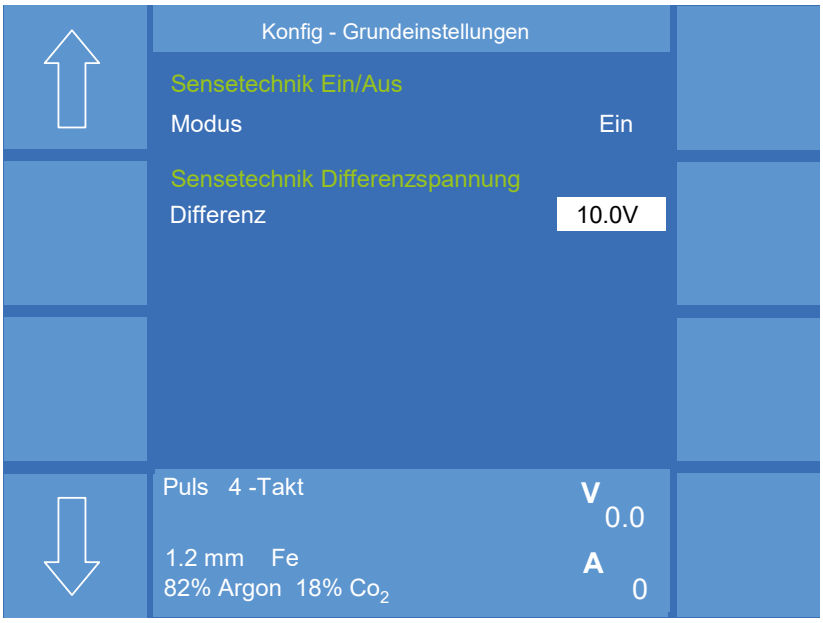

Figure 34. Config - Sense technology

10.3.1.3 Config - General - QWD

In this menu you configure which PushPull drive is connected to which wire drive (QWD1 ... QWD4).

- No drive
- Cloos Arcette
- Cloos Arcette 2
- Binzel PP+401D
- TBI PPP 7G/7W
- Dinse DIX MPZ 304
- Not defined

Blocked drives will be displayed in red in the selection. These drives may be activated optionally.

10.3.2 Config - General - SD module

"Off"	The error message is only displayed as long as the error exists.
“until reset”	The error message is displayed until the next weld start.

For more information on the configuration of the SD module, refer to section "4. SD module" on page 113.

.

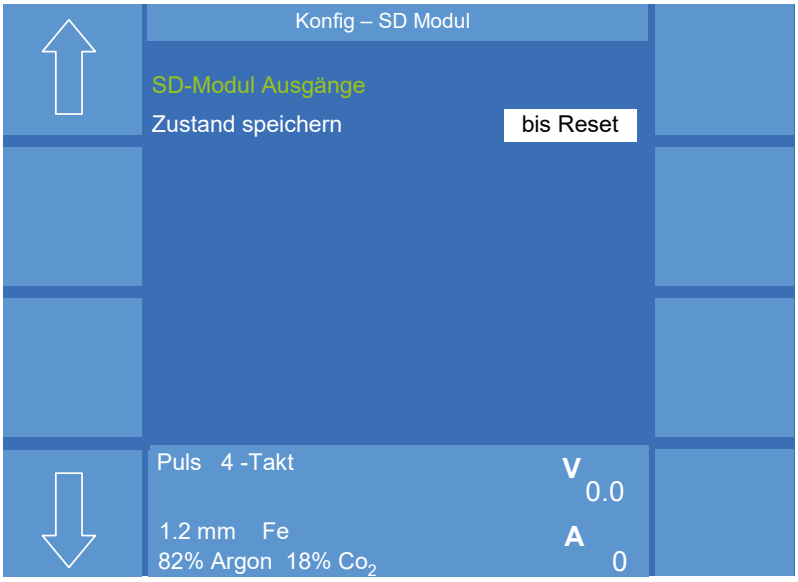

Figure 35. Config SD module

10.3.3 Config - General - Options

The welding power source is equipped with an option chip. Each time when being switched on, the processor of the welding power source detects the activated software options in the option chip, e. g. Release Pulse, ExpertMode, Operating data, Push-Pull systems etc., see Figure 36.

If you intend to activate an additional option, CLOOS Schweisstechnik will provide a new 16 digit activation code.

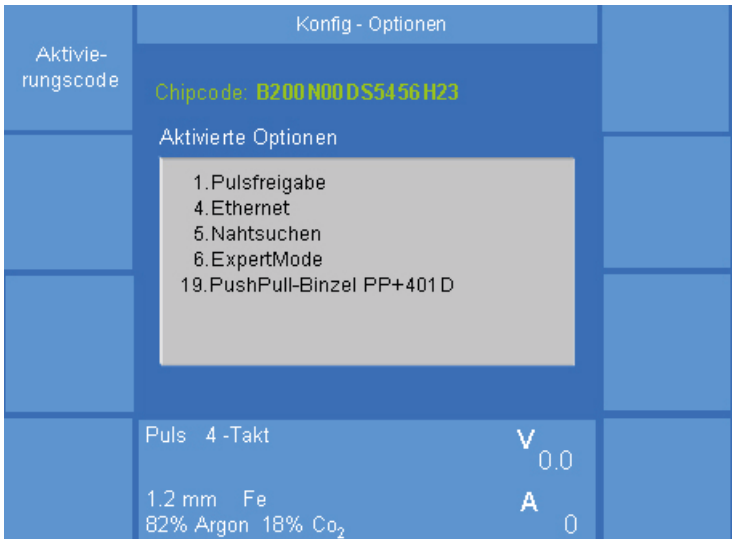

Figure 36. Config Options

Enter this activation code after activating the "Activation code" function and confirm with "Enter". If all information is correct, the newly activated option is listed in the "Activated options" overview.

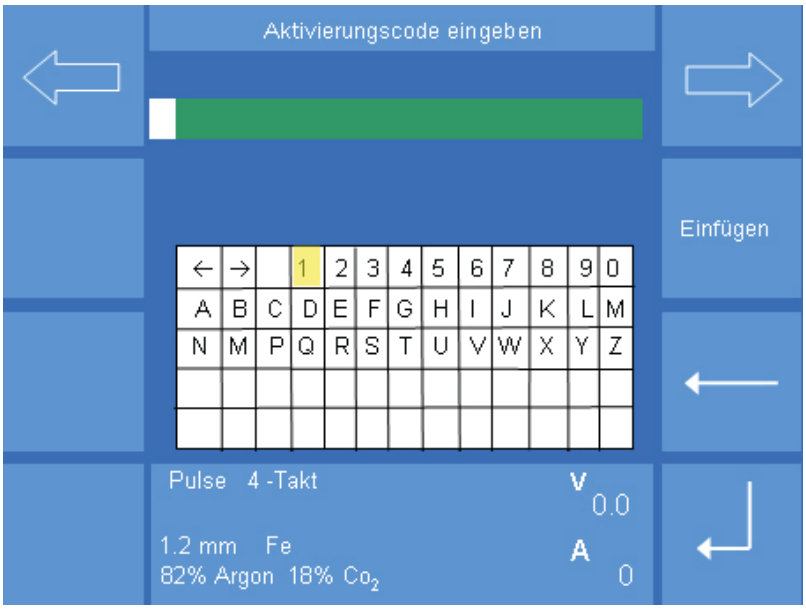

Figure 37. Config Activation code

If an error occurred during the transmission or input of the activation code, the error message "317 Wrong activation code!" appears. In this case you have to check the information and repeat the process.

10.4 Config - Water monitoring

ATTENTION!

The water monitoring is inactive if no sensors are available or the pump is switched off, see chapter 10.1.3 on page 73.

Use the arrow symbols to switch between the individual menu items.

Figure 38. Config" - "Water monitoring" menu

Water flow rate

In the menu "Water monitoring" the minimum water flow rate can be monitored.

- The limit value is set in l/min. The limit value should not fall below 1.2 l/min.
- The start delay allows a trouble-free recording of the measured values. In addition, an error must exist for a certain error time in order to be detected as error.
- If "Message" has been selected, an output signal exists on the CAN bus of the welding power source. This signal can be processed by a peripheral control (PLC). If "Abort" is selected, the Arc start command will be reset in the event of an error.

Water temperature

In the "Water temperature" menu, the temperature of the coolant can be monitored.

- The limit value is set in °C. The limit value should not exceed 60°C.
- The start delay allows a trouble-free recording of the measured values. In addition, an error must exist for a certain error time in order to be detected as error.
- If "Message" has been selected, an output signal exists on the CAN bus of the welding power source. This signal can be processed by a peripheral control (PLC). If "Abort" is selected, the Arc start command will be reset in the event of an error.

Figure 39. Error message

In case of an error an error message is shown on the display mask.

This message can be hidden by means of the "Esc" key. If the error cause is not remedied, the error message will be shown again after 10 sec.

The menu is quit by shortly pressing rotary knob 3!

10.5 Config - Compensation

Synergy characteristic curves are created under certain electrical and physical conditions (cable lengths, cross sections etc.). Deviating conditions are often prevailing during the daily welding applications. For this reason a compensation must be performed.

INFO!

The voltage values depend on the size of the external circuit. When changing the external circuit, you have to determine the compensation again!

- **From software version number x.05 on**

The compensation of the external welding current circuit is made via the manual input of the cable length in meter (m). Factory setting is 13 m.

Total cable length
The cable lengths of the connection cable assembly, minus line (earth) and torch cable assembly are added and entered as numerical value.

Based on the cable length the welding power source processor corrects automatically the required regulator settings for the pulse mode. The corrections are maintained even after switching off the welding power source.

Time constant (Tau)
If there is a great distance between the connection cable assembly and the minus return line, an inductive influence develops (large area between the conductors). This inductive component also has an influence on the characteristic curves. By means of the parameter T adaptation a compensation can also be effected. By increasing the parameter (+0.05...+0.1) a larger area can be compensated.

An optimum compensation of the external welding current circuit has been reached if – in the case of correct welding parameters – the values for Fine adjustment ArcLength and ArcDynamic are set to max. -10...10.

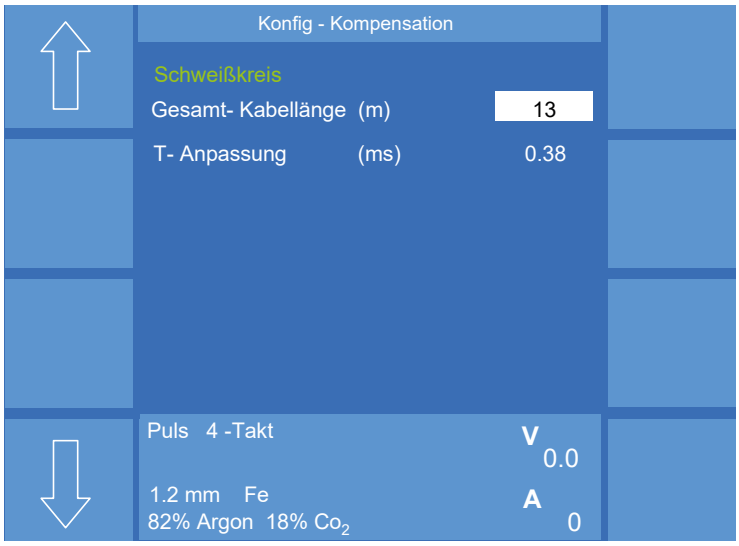

Figure 40. Compensation of the welding current circuit

- **From software version number x.10 on**

Before starting the measurement, make sure that either:

- there is no welding wire in the torch

or

- the welding wire is pulled off the torch so that the wire does not stick out of the current tip.

ATTENTION!

Ensure that no welding wire touches the workpiece during the measurement.

Measurement is started at the operating module via rotary knob. In the operating modes 2-cycle, 4-cycle, Super-4-cycle and spot welding it is also possible via torch trigger.

Proceed as follows in order to perform the measurement:

1. Remove the gas nozzle from the torch.
2. Select and confirm with the rotary knob in the "MAIN (2)" menu --> "Config"--> "Compensation" --> "Enable measurement".
   - The controller changes to the measurement mode.
3. Place the torch head firmly on the workpiece. The current tip must touch the workpiece.
4. Press the torch trigger or select the menu item "Start measurement" at the operating module to start the measurement.
   - The measuring current is fed in.

Measurement is finished after approx. 1 second. The measured values are automatically recorded.

Repeat the measurement until the measured values only differ a little bit. Normally four subsequent measurements are enough.

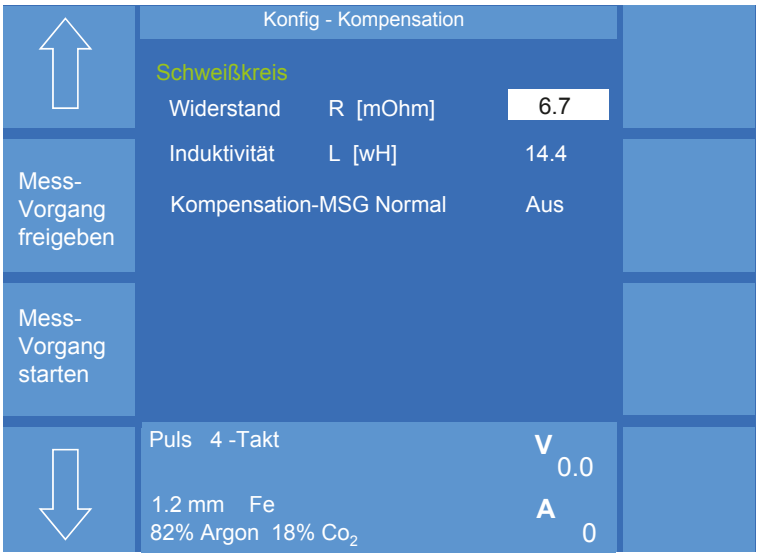

Figure 41. Compensation of the welding current circuit from version x.10 on

The determined values can be re-adjusted manually if necessary.

An optimum compensation of the external welding current circuit has been reached if – in the case of correct welding parameters – the values for Fine adjustment "ArcLength" and "ArcDynamic" are set to max. -10...10.

Use the menu item "Compensation MIG/MAG Normal" to switch on or off the compensation for the MIG/MAG Normal process. If the function is set to “Off”, the values are retained in the jobs which were generated in the MIG/MAG Normal process.

10.6 Access rights

10.6.1 Config - Access management

The welding power source is provided with an access management system as standard. Different access rights and user rights for the welding power source are included in this management system.

- Use the arrow symbols to switch between the individual menu items.

The access management of the welding power source has 3 operating levels "Automatic", "Programmer" and "Configurator".

Automatic
The user with the "Automatic" operating level can look at the individual functions. Access to the preset values is blocked.

The user with "Automatic" operating level does not need an access code!

Programmer
The user with the "Programmer" operating level can call and look at the individual functions. He has an active access right to all welding parameters.

The user must register with an 8-digit code number.

Configurator
The user with the "Configurator" operating level can call and look at the individual functions. He has an active access right to all preset values including access to the synergy characteristic curves.

The user must register with an 8-digit code number.

Figure 42. Config Access management menu

Access code for operating level
In this menu, a code number can be entered for the "Programmer" and "Configurator" operating levels.

Input of the code number
The code number consists of an 8-digit number sequence. You can assign a number between 0...7 to each digit.

This input does not need to be saved separately.

Operating level after switching on
This menu item enables you to determine the preset operating level after switching on the welding power source. You can select between "Automatic", "Programmer" and "Configurator". The access options are described at the beginning of this paragraph.

Automatic log off of configurator
To protect the welding power source against unauthorised access, you have the option to reset same after a defined time to the "Operating level when switching on".

You can select between "Off "and "Log out after 1 to 30 min".

Access management - Option
In this menu, the following access rights can be set for the "Automatic" operating level:

Welding	enable / lock
Job call	enable / lock
Rotary knob	Enable Power / Fine
	Enable Fine
	Enable Power / Fine
Power, Fine = Fine adjustment / ArcLength	

Figure 43. Config Access Management Options

Exit the "Config"- "Access management" menu by pressing rotary knob 3 or the "Esc" key!

INFO!

Forgotten your password?
After 5 unsuccessful attempts to enter the password, an 8-digit code number appears below the "Access code" line.

With the aid of the code number it is possible to decode the password by calling the CLOOS Service Hotline. You can now enter again the code number.

10.6.2 Config - User management and PAK (option)

The access rights for certain functions, adjustments and welding parameters are released or blocked and saved in a user profile via the user management.

The user management allows to transfer these user profiles to a PAK (Personal Access Key) each. For this, the welding power source or the operating module must dispose of a PAK port.

The PAK is connected to the PAK port of the welding power source and the user profile is loaded. The user is automatically logged on to the welding power source as soon as the information saved in the PAK match with the

information saved in the welding power source. The respective user profile is then activated in the welding power source.

If a user logs in who is new for the welding power source, the access is either denied or his user profile is transferred into the user management and stored, depending on the setting. The respective user profile is then activated in the welding power source.

Operating level after switching on
This menu item enables you to determine the preset operating level after switching on the welding power source. You can select between "Automatic", "Programmer" and "Configurator".

Transfer of PAK files
In this menu item you can select the following functions:

Name	Function
Allowed (default)	Unknown users are allowed to log in at the welding power source. Information of unknown users are saved at the welding power source.
Not allowed	Only users who are listed in the configuration of the welding power source are allowed to log in.

Welding process enable
In this menu item you can select the following functions:

Name	Function
Always	The welding power source always activates the welding process, even if no user is logged in.
After login (default)	The welding power source only activates the welding process after successful login.

Job range enable
In this menu item you can select the following functions:

Name	Function
All	The user can call and use all jobs (1 ... 999) which are stored in the welding power source.
Allowed jobs (default)	The user can only call and use the allowed jobs.

INFO!

It is possible to specify defined parameter limits (setting ranges) within a job for the "Automatic" and "Programmer" operating levels, see section "7.4 Setting ranges" on page 60.

Auto log off of configurator

Name	Function
Off (default)	The user with the "Configurator" operating level is not logged off automatically.
... min.	The user with the "Configurator" operating level is logged off automatically after a preset time (1min ... 30min).

INFO!

If no input is made via the operating module during the preset time period, the access state is reset to the preset "Operating level after switch on".

Input of password via keyboard

In this menu item you can select the following functions:

Name	Function
Allowed (default)	The manual input of a 6-digit code number at the welding power source is allowed.
Not allowed	The user can only log in to the welding power source with a PAK.

10.6.2.1 Config - User management - Options

INFO!

The following 3 functions refer to the "Automatic" operating level.

Figure 44. User management - Options

Save job

In this menu item you can select the following functions:

Name	Function
Enable	You can save jobs without login.
Lock	You can only save jobs after login with your password or PAK.

Call up a Job

Name	Function
Enable	You can call jobs without login.
Lock	You can only call jobs after login with your password or PAK.

Rotary knob

In this menu item you can select the following functions:

Name	Function
Enable Power / Fine	You can change both parameters.
Enable Fine	You can change the parameter "Fine adjustment"
Lock Power/Fine	You cannot change both parameters.

10.6.2.2 Config - User management - User overview

INFO!

You can only do changes in the "Config" - "User management - User overview" menu if you are logged in at the welding power source with the "Configurator" operating level.

This menu lists all allowed user names (maximum 30 characters). The number of the user names is restricted to 20. Every user name is listed with the corresponding operating level.

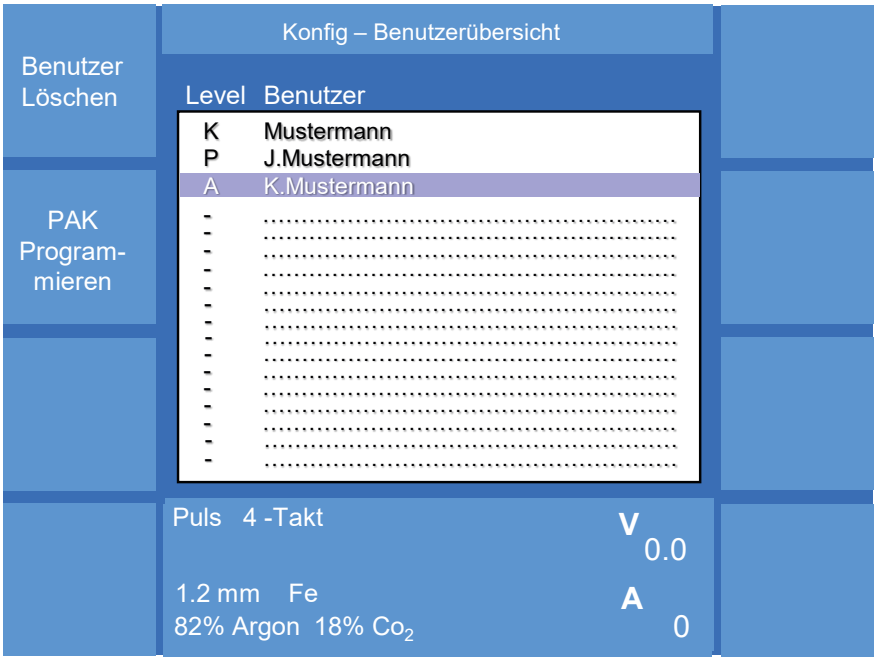

Figure 45. Config - User overview

Create/edit new user

Push rotary knob 3 to select a free storage space in the user overview and to save all relevant user data in the "Config - Edit user" menu.

Delete user

Figure 46. Conig - User - Edit

You can use the "Delete user" function to remove individual users:

1. Select the user via rotary knob 3.
2. Press the "Delete user" function.
   - This is done without any further query.

INFO!	**If the last user with operating level "Configurator" is deleted, the error message "Last configurator locked" appears.** **This prevents the last authorised user from being deleted unintentionally.**

10.6.2.3 Config - User management - User overview - PAK

INFO!

A PAK can only save one user profile.
If you save another user on an already allocated PAK, the first user will get lost.

You can save the created/selected users to a PAK using the "Program PAK" function.

Figure 47. PAK Programming

MAIN

If a PAK is assigned to a user, the user can log on to the welding power source with the PAK. Only the functions which are released for this user are available.

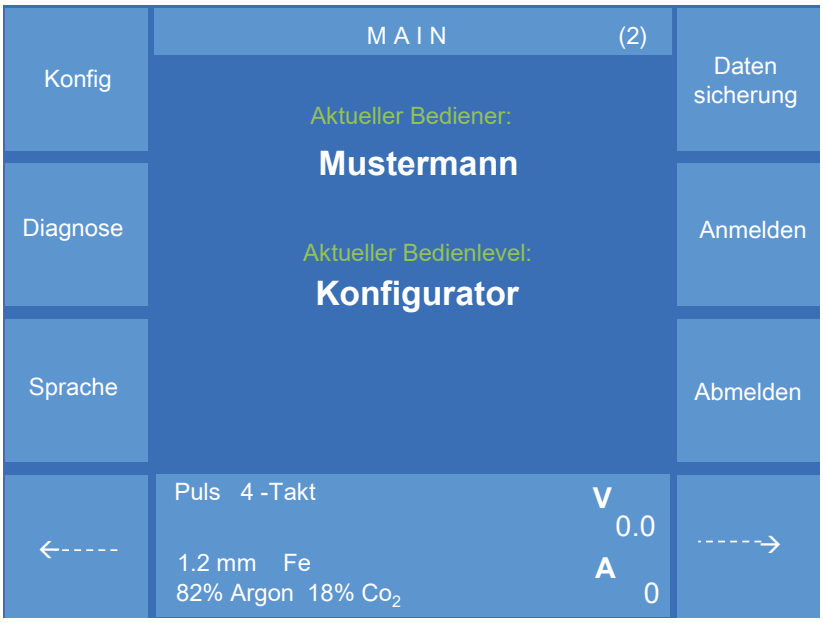

Figure 48. MAIN

10.7 Config - PC adaptation

An Ethernet interface is used to connect the welding power source to the QDM (Qineo Data Manager) software. For the communication of the welding power source within the network, the IP address and the subnet mask must be set.

Use the arrow keys to move to the desired position for entering numbers. The selected number field is highlighted in white. You can select a number between 000 and 255 by means of rotary knob 3. Use one of the arrow keys to move to the next input field. Press the rotary knob to exit the input mode.

Figure 49. Config - PC adaptation

10.8 Config - Clock

For an exact data recording during weld data monitoring the exact time and the correct data are important. You can enter this data in the "Config - Clock" menu. Use the arrow symbols to switch between the individual menu items. The input is made with rotary knob 3.

The input is finished by pressing rotary knob 3. To exit the menu, press the "Esc" key.

10.9 Config - Process monitoring

Arc existing process control

If the signal "Arc existing" is not active for more than 1 second during the welding process (process phase), the error message "Err. 23 Arc failure process phase" will appear on the display.

You have the following options:

- Off
- Reset on Start

The error message is reset at the next "Welding start" signal.

- Reset from external

The error message is reset by an external signal (OMI or bus system).

Ignition control

If there is no signal "Arc existing" within 5 seconds after the command "Start welding", the error message "Err. 24 Arc failure ignition phase" will appear on the display.

You have the following options:

- Off

ATTENTION! When the ignition control is off, wire feed will continue in case of a trouble signal.

- Reset on Start

The error message is reset at the next "Welding start" signal.

- Reset from external

The error message is reset by an external signal (OMI or bus system).

Figure 50. Process monitoring

11. MAIN (2) - Diagnostics

The diagnostics menu provides the following submenus:

- Status of the cooling system.
- Query of the power class and the software versions.
- Input / output occupancy of different functions.
- Status on the QWD (Wire Drive).
- PC adaptation with information about the MAC address, IP address and Subnet mask of the welding power source.
- Display of Tandem state and Tandem configuration.
- Display of the configuration of pulsed arc synchronisation.
- Display of the entries in the system logbook.
- Display of the robot communication state.

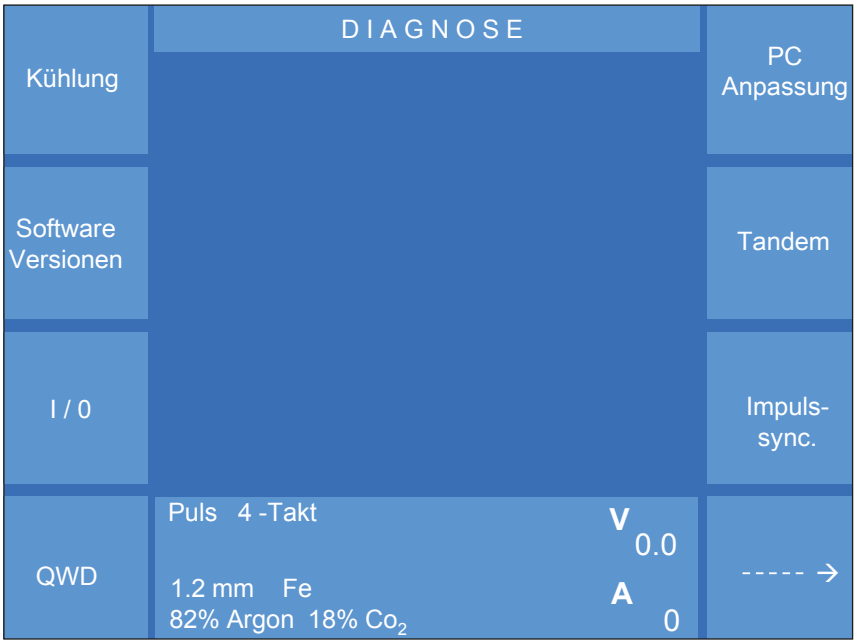

Figure 51. Diagnostics menu

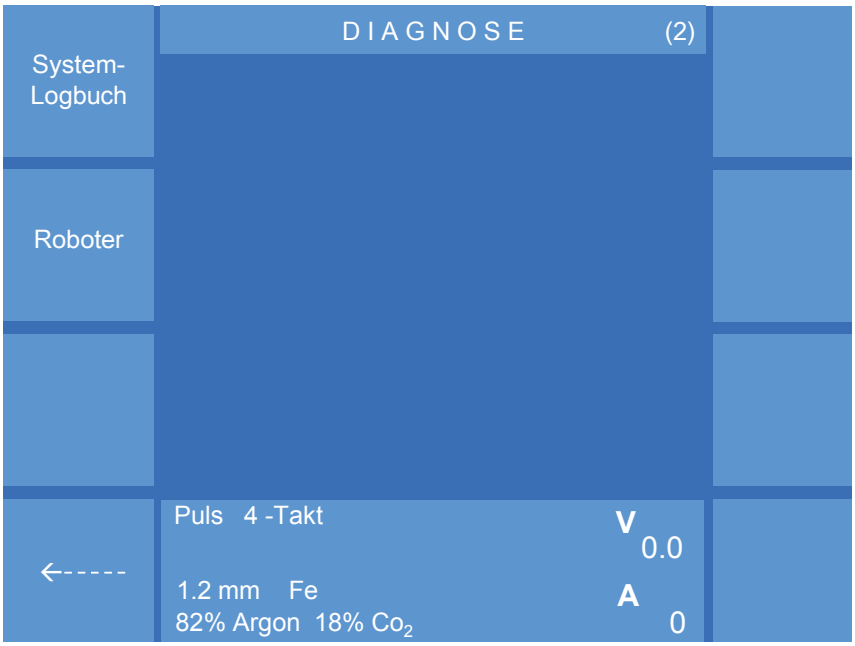

Figure 52. Premium Diagnostics_General_(2)

11.1 Diagnostics Cooling

In menu cooling the current functional state of the water pump and the fan can be visualised. The symbols for the pump and the fan are highlighted in yellow when the components are in operation. As for the coolant pump, the flow quantity and the coolant temperature are shown as well (for wire drive units with water sensors).

For an active control of the functions, the pump and the fan can be switched on or off by means of the function keys.

The menu item Coding shows whether an internal or external cooling is active.

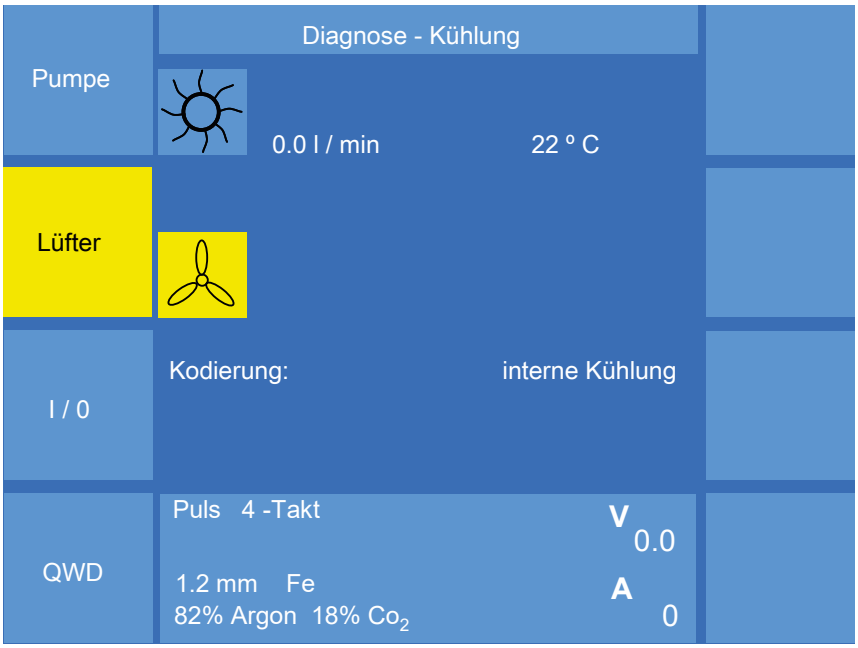

Figure 53. Diagnostics Cooling

11.2 Diagnostics Software versions

In the "Software versions" menu, the design of the welding power source, the power class and the data set number are displayed. The data set number identifies the state of development of the synergy characteristic curves. The software versions of the individual software modules are displayed under "Modules". E. g. QPULSE, QRPU, QDSP etc.

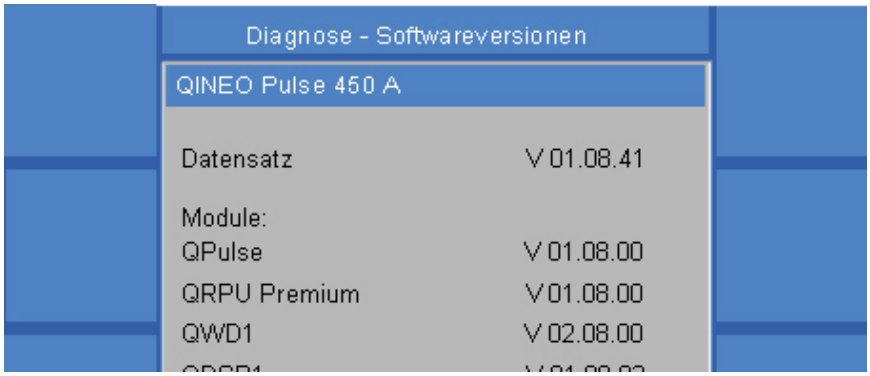

Figure 54. Diagnostics Software versions

11.3 Diagnostics I / 0 (Inputs and Outputs)

WARNING!

Damage to the robot system

Changes to the signal states during Automatic mode can lead to unforeseeable program runs.

- **Never change the signal states of inputs and outputs during Automatic mode!**

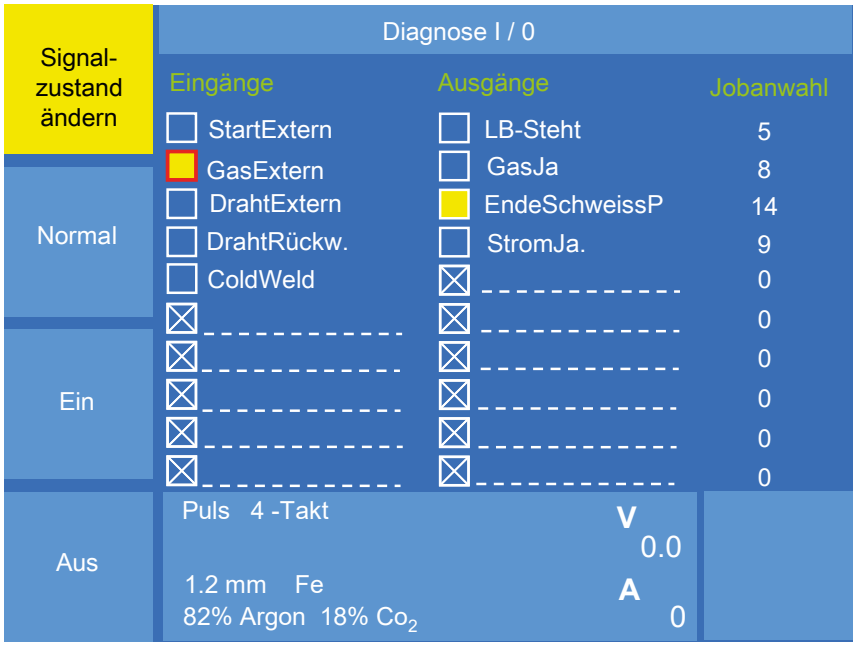

Figure 55. Menu diagnostics inputs/outputs

The I/0 menu offers a very convenient way of displaying the signal states of the inputs and outputs on the Qineo. 10 inputs and 10 outputs each are available. The user/service technician is free to assign these inputs and outputs in order to initiate certain situations and signal states. The Qineo provides the following signal assignment.

Inputs
StartExtern, GasExtern, WireExtern, WireBack, AirBlowthru, WeldEnable, CKchangeover 0, CKchangeover1, JobContinuPlus, JobContinuMinus, ReserveOutput 0, ReserveOutput 1, SpeedVariWeld, Pulsfree Pulse, ReleaseGasNozSens, ResetFailure

Outputs
ARCexist, GasYes, WireStoreYes, CurrentYes, EndWeldVolt, SystemFault, TempFault, CollectFault, ReadyforWeld, ProcessActive, Watershortage, Waterflow, GasNozzContact, SD CollectFault, CollectFault Gr.1, CollectFault Gr.2, WireFailure, CurrFailure, VoltFailure, GasFailure, FailMotCurrCK, FailMotCurrCDD, FailWeldTime, FailWireStor, FaultIgnitMon, FailureRes 1, FailureRes 2, CollectWarningGr1, CollectWarningGr2, WarningWire, WarningCurrent, WarningVoltage, WarningGas, WarnMotCurrCK, WarnMotCurrCDD, WarnWeldTime, WarningRes 1,WarningRes 2, SDAbort, Sd ready.

Select signals
Use rotary knob 3 to select a signal place for an input or output in the I/0 menu (1-10).

Press the rotary knob to change to the selection mode. The storage space is highlighted in green. Select the appropriate input or output by turning the rotary knob. By pressing the rotary knob again, the selected function for this signal place is determined.

If the signal state is 1 (On), the box in front of the input or output is highlighted in yellow. If the signal state is 0 (Off), a white framed box only is visible.

By means of the function "Change signal state" the manual input of signals can be activated. The signal state can be switched on or off by using the "On" or "Off" function. If the input or output is active, the box is shown red framed. Pressing the "Normal" function resets the signals to their original state, see Figure 55.

Job selection
The history of the jobs called up by the welding power source can be made visible on the right part of the display under "Job selection".

11.4 Diagnostics VBC module

If the welding power source is equipped with a VBC module, this is indicated in the menu "Diagnostics" --> "I/O" by the menu item "VBC".

If the VBC module has a ProfiNet interface, the menu item "ProfiNet" appears in the submenu "Diagnostics I/O" -> "VBC".

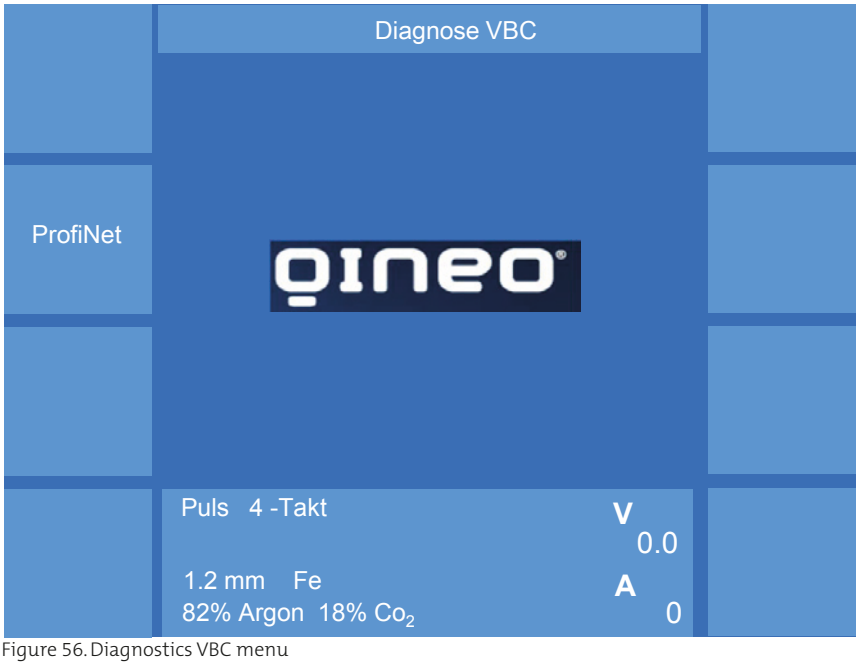

Figure 56. Diagnostics VBC menu

In the menu "Diagnostics" --> "VBC" --> "ProfiNet" you can select the menu items "Status I/O" and "Module Reset". The menu item "Status I/O" indicates the status bits of the inputs and outputs of the VBC module. Via the menu item "Module Reset" you reset the IP address and the subnet mask of the VBC module to 000.000.000.000.

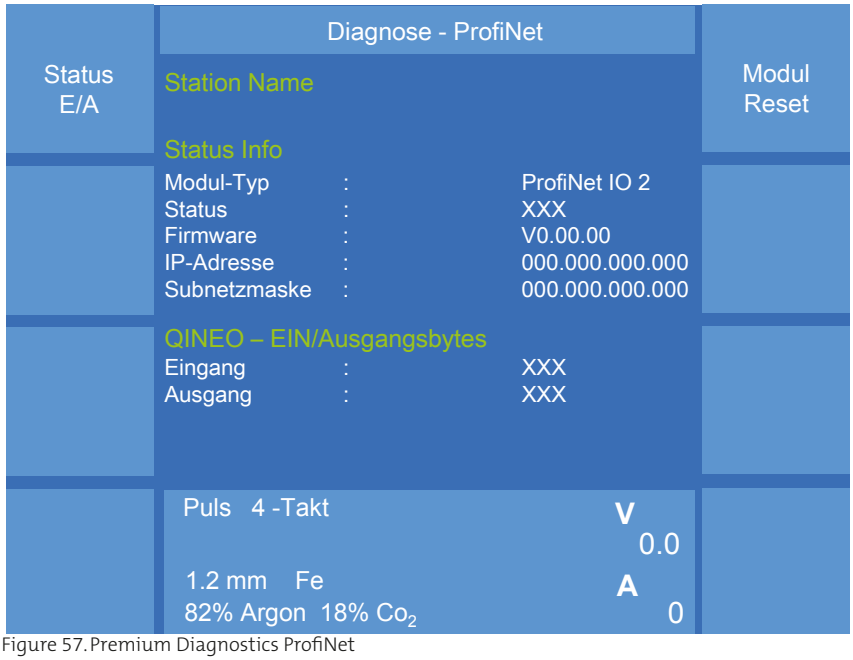

Figure 57. Premium Diagnostics ProfiNet

11.5 Diagnostics QWD

The QWD menu offers a convenient way of displaying the most important signal states in the wire drive unit. If the signal state is 1 (On), the appropriate field is highlighted in yellow.

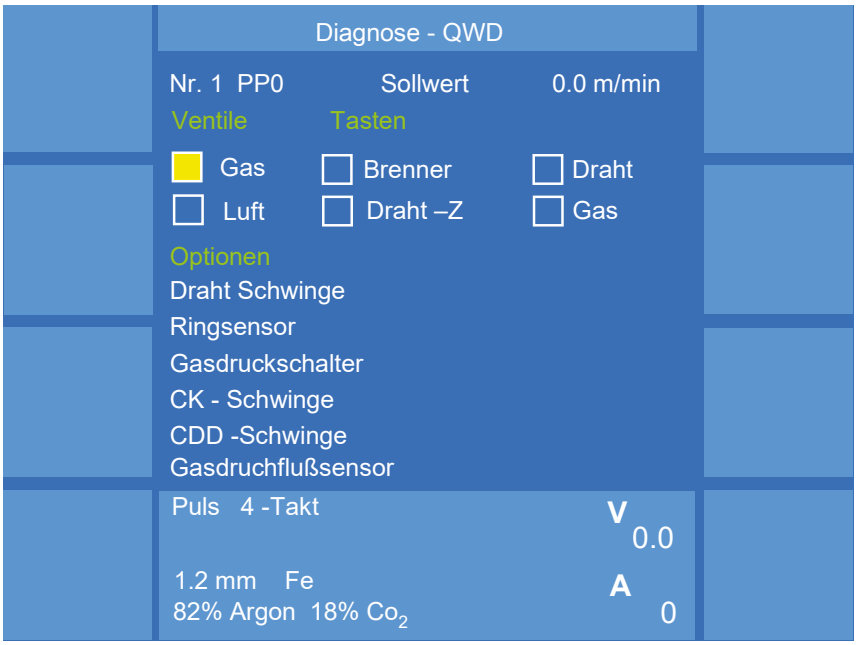

Figure 58. Diagnostics QWD menu

11.6 Diagnostics PC adaptation

The MAC address, the IP address and the subnet mask of the welding power source are displayed in this menu.

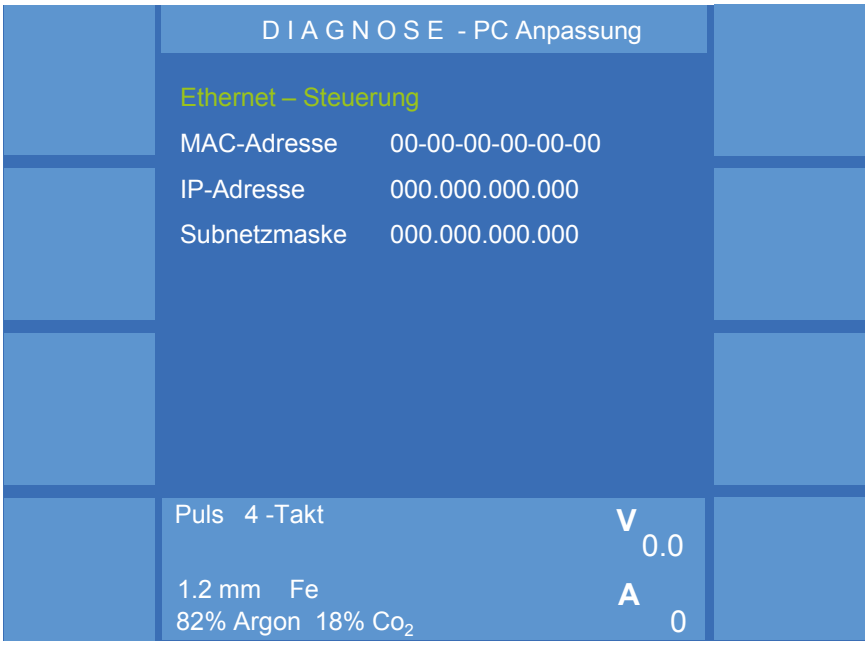

Figure 59. Diagnostics PC adaptation menu

11.7 Diagnostics Tandem

This menu displays the Tandem configuration and the Tandem state of the welding power source.

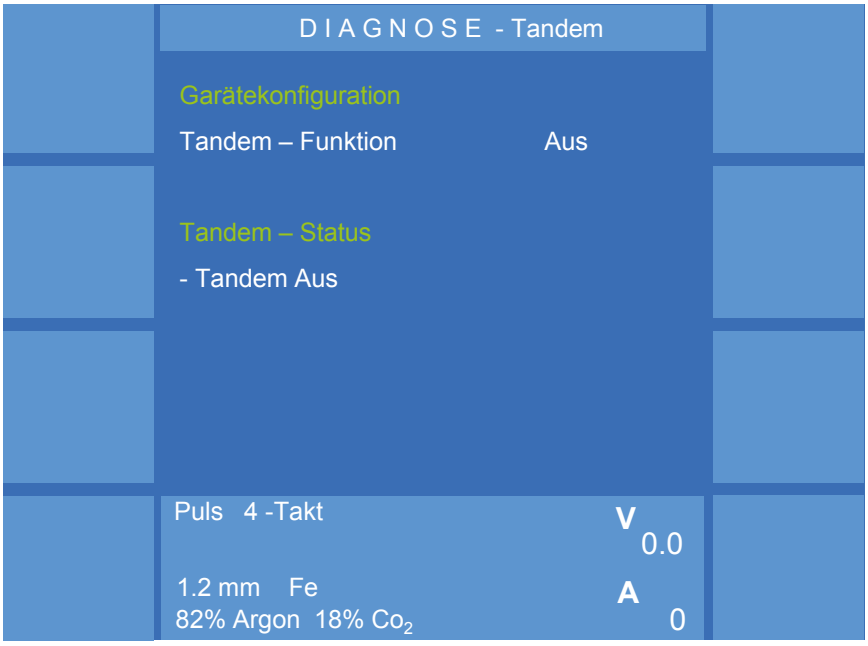

Figure 60. Diagnostics Tandem menu

11.8 Diagnostics pulsed arc synchronisation

The synchronisation mode of the welding power source is shown in this menu.

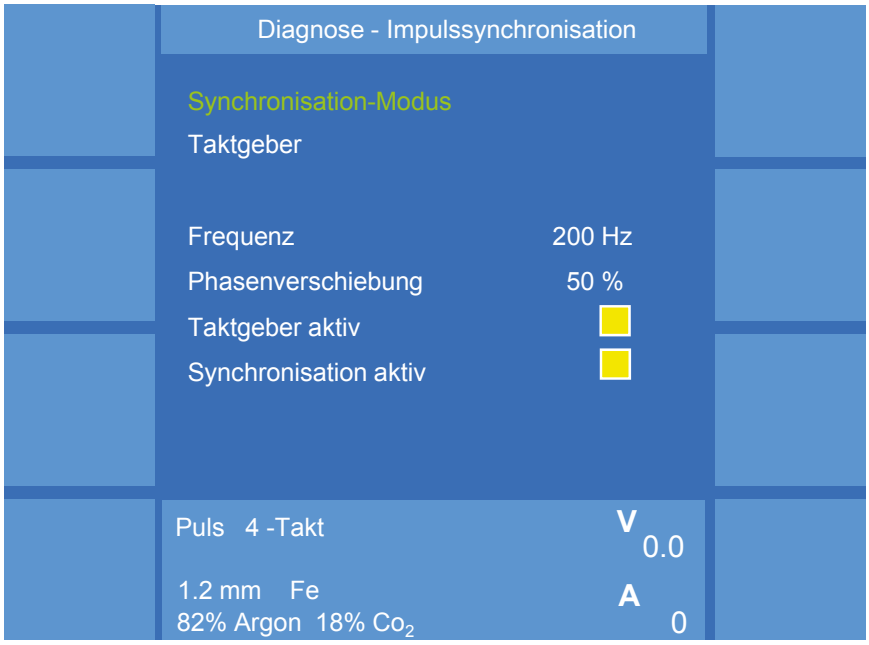

Figure 61. Diagnostics Pulsed arc synchronisation menu

11.9 Diagnostics System logbook

If a memory card is inserted in the control board of the welding power source, the welding power source saves all system messages on this memory card. System messages can be error entries (water monitoring, temperature error etc.) or documentation entries (user registration, save/ delete job etc.).

The menu "Diagnostics" --> "System logbook" of the welding power source shows all existing entries in chronological order.

An entry contains the following information:

Time stamp	The time stamp of the logbook entry. At this time the welding power source saved the entry in the logbook.
User	The user who was active when the entry was saved.
Error no. / Docu no.	For an error entry, the error number and for a documentation entry, the documentation number that identifies the entry.
Error text / Docu text	The text belonging to the respective error number / documentation number.
Details	An additional information according to entry.

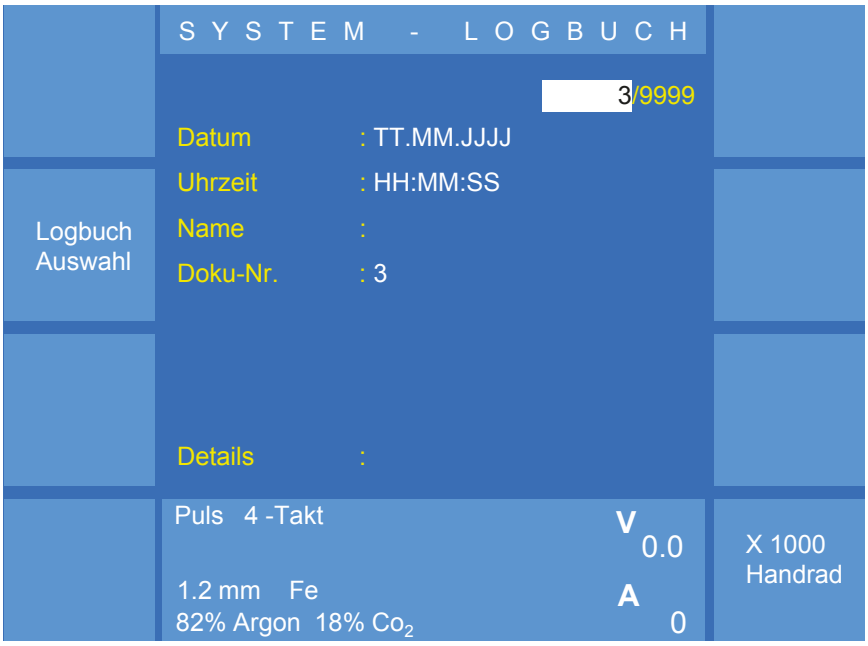

Figure 62. Diagnostics System logbook menu

The logbooks must be copied and deleted from the memory card at regular intervals, as the storage space on the memory card is limited. Using the QDM software there are two options: Via the backup functions or the management functions.

INFO!

The system logbooks are allocated to a certain welding power source but this allocation cannot be seen in the logbooks. It is important that this allocation is not lost when the logbooks are archived or are copied again later into the data management of the application.

The date for every logbook is indicated in the menu "Diagnostics" --> "System logbook" --> "Logbook selection". The number of entries indicates the number of logbooks.

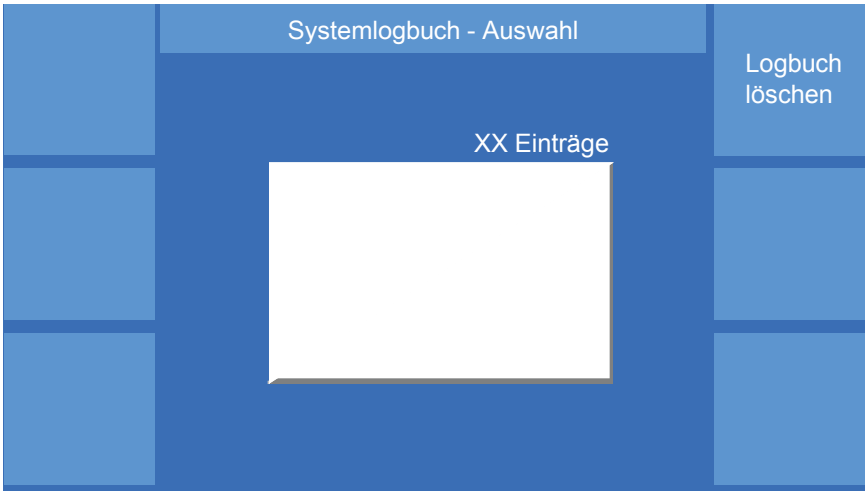

Figure 63. Diagnostics System logbook selection menu

11.9.1 Diagnostics Robot (from x.11.30 on)

This menu displays the communication state between connected robot and welding power source. The following values are displayed:

Version	Shows the software version of the robot controller.
Protocol version	It is differentiated between protocol version 1 and protocol version 2. You can find additional information in the chapter "QIROX Technology Interface (QTI)" on page 168.
Robot state	It is differentiated between: • Operational • Failed • Software too old (--> Update robot) • Not connected
Parameters	Number of the transmitted welding parameters (characteristic curve selection, gas, kind of wire etc.). This counter is off during job mode.
Commands	Special commands (determine the protocol version, switch etc.).
Connections	Number of the connection attempts.
VBC command digital	Number of the digital welding parameters (start on, start off, air blow etc.).
VBC command analogue	Number of commands due to control voltages.

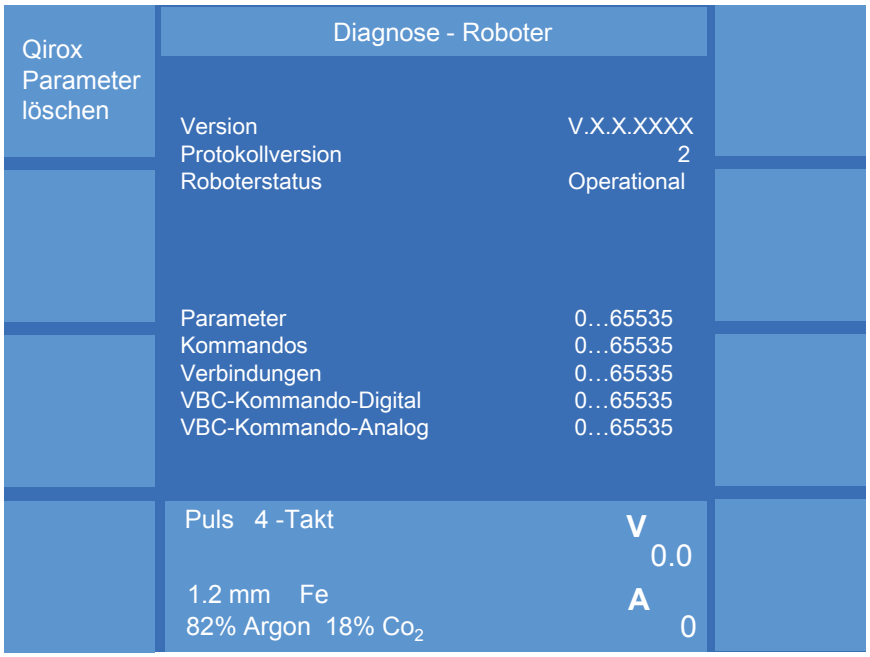

INFO! **The counters are set to 0 if the welding power source is isolated from power supply.**

INFO! **If the counter reaches the value 65535, the next value will be 1 again.**

12. MAIN (2) - Language

For different languages 4 storage places are available in this menu. The factory setting for the first 3 storage places is allocated to the languages German, English and French. The user is free to allocate the 4th storage place to any language required. An optional language must be loaded from a SD memory card.

Insert the SD memory card into the card slot below rotary knob 3.

Press the function "Read from card". All language files on the SD memory card are displayed. Select the required language file by means of rotary knob 3 and confirm the selection by pressing rotary knob 3 (Enter function).

The newly selected language is copied into the 4th storage place and can be called up by means of the function "Optional language", see Figure 64.

The optional language can be deleted with the function key F6.

INFO! An error message will appear if no SD memory card is available in the card slot.

Figure 64. Card slot with SD memory card

13. MAIN (2) - Data backup

In the "Data backup" menu, so-called jobs can be written from the welding power source to the SD memory card or from the SD memory card to the job memory of the welding power source.

Insert the SD memory card into the card slot below rotary knob 3. Press the "Data backup" function.

Figure 65. Data backup

13.1 Copy job to SD memory card

All jobs in the job memory of the welding power source are displayed.

Save a single job
Use rotary knob 3 to select the job to be saved and confirm the selection by pressing rotary knob 3 (Enter function). The job will be saved on the SD memory card.

Save several jobs
Use the function "from Job" to select the beginning of the block, e. g. Job 1.

The display shows "Block Start" and the selected job number in yellow. Now select by means of rotary knob 3 the end of the block, e. g. job 7 and press the function "to Job".

Press rotary knob 3 to save the marked block on the SD memory card.

13.2 Read job from SD memory card

All jobs on the SD memory card are displayed.

Read in a single job
Use rotary knob 3 to select the job to be saved and confirm the selection by pressing rotary knob 3 (Enter function). The job is saved in the job memory of the welding power source.

Read in several jobs (Block)
Use the function "from Job" to select the beginning of the block, e. g. Job 1.

The display shows "Block Start" and the selected job number in yellow. Now select by means of rotary knob 3 the end of the block, e. g. job 7 and press the function "to Job".

Press rotary knob 3 to save the marked block in the job memory of the welding power source.

13.3 Copy characteristic curve to SD card

This menu provides 2 functions.

Syn > Card
After activating the function, the current characteristic curve is saved on the SD memory card.

DSA > Card
After activating the function, the current data set number is saved on the SD memory card.

13.4 Read characteristic curve from SD memory card

After activating the function, all characteristic curves on the SD memory card are shown on the display. You can select a characteristic curve by turning rotary knob 3 or via the arrow keys. By pressing the rotary knob, the selected characteristic curve is loaded into the memory of the welding power source.

13.5 Copy configuration data to SD memory card

Shows all existing configuration files. Only saves the existing files (green tick).

13.6 Read configuration data from SD memory card

The content of the SD memory card is displayed. You can only select and transfer individual files.

INFO! An error message will appear if no SD memory card is available in the card slot.

14. User log on/off

14.1 MAIN (2) - Log on

As described in paragraph "10.6.1 Config - Access management", the welding power source is provided with different operating levels as a protection against unauthorised use. To enter your access code, press the "Log-on" function. The current operating level is shown in the upper part of the display.

You can now enter your personal access code in the lower part of the display. The access code is activated by pressing rotary knob 3!

INFO!

After 5 unsuccessful attempts to enter the password, an 8-digit code number appears below the "Access code" line. With the aid of the code number it is possible to decode the password by calling the CLOOS Service Hotline. You can now enter the code number again.

14.2 MAIN (2) - Log off

If the "Log-off" function is activated, the control immediately returns to the adjusted operating level "Operating level after switching on", see section "10.6.1 Config - Access management".

15. Job mode

The welding power source allows the storage of individual parameter settings. These parameter settings are saved as job. The welding power source provides 999 Job storage places. On the left side of the display the Job storage places can be made visible in increments of 10 or 100.

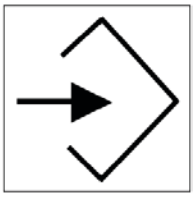

15.1 Save job

Press the "Save" button to access the "Save job" menu. Select a free storage space by means of rotary knob 3.

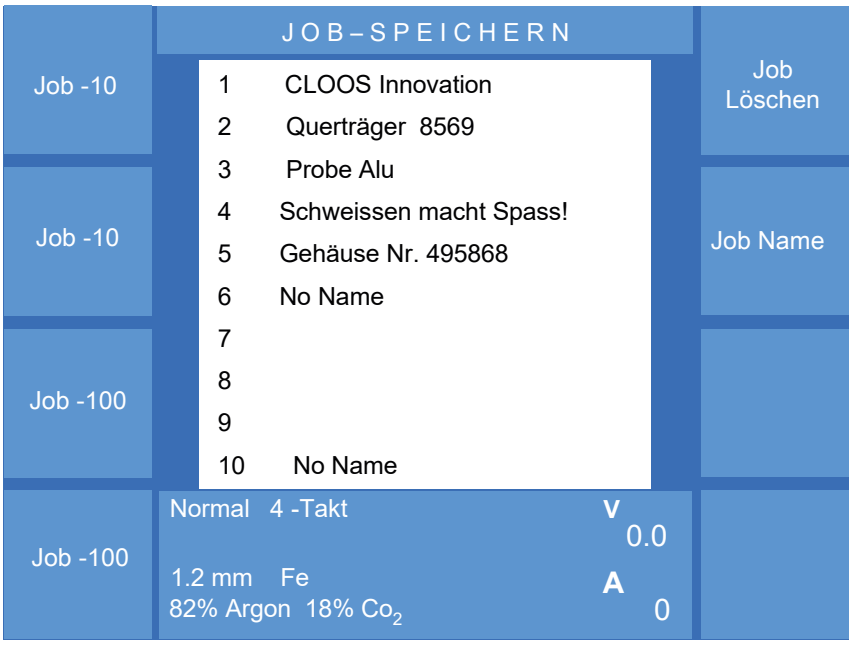

Figure 66. Save job menu

The "Job name" function takes you to the "Text input" menu.

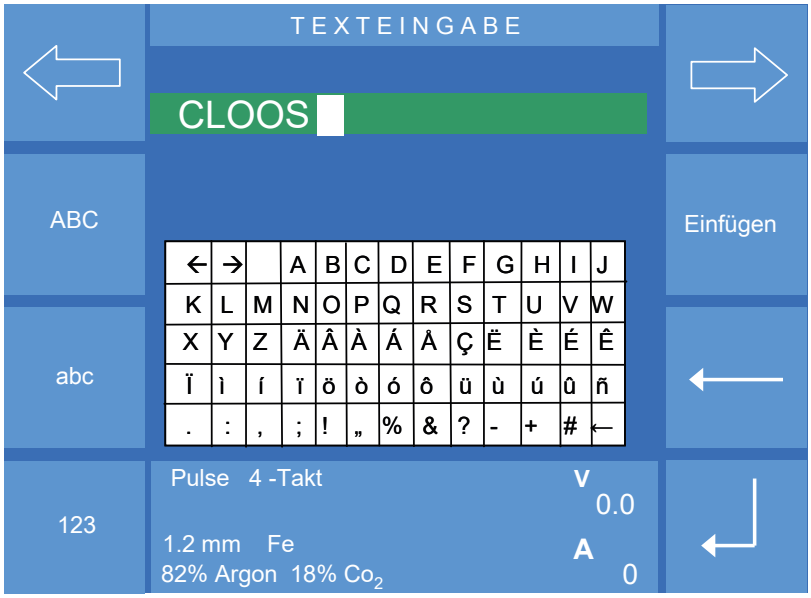

Figure 67. Save job name menu

Functions on the left side:

Function name/symbol	Functional description
Left arrow key	Cursor moves one position to the left
Capital letters and special characters	Switch between upper and lower case letters
Small letters and special characters	
Numbers and special characters	

Functions on the right side:

Function name/symbol	Functional description
Right arrow key	Cursor moves one position to the right
"Insert" function	Inserts one or more characters into an existing text. The new character is always added left to the present cursor position.
Function "<--"	To delete characters. The character left to the cursor is always deleted.
"Enter" function	To confirm the entry.

Turn rotary knob 3 (yellow cursor) until you find the required character in the character table. Shortly press rotary knob 3 to transfer the character to the upper line.

Once you have selected all characters, confirm your selection with the "Enter" function. The job is now saved with all selected welding parameters under the name you selected, see Figure 67.

The new job is not activated by the storage process. Activation is done with the "Job" button.

15.2 Overwrite an existing job

To overwrite an existing job, a job must be activated, see section "15.4 Activate job".

If a job is activated, you can optimise the existing welding parameters and overwrite them by pressing the save button twice.

15.3 Copy a job

To copy an existing job, a job must be activated, see section "15.4 Activate job".

Press the "Save" button in job mode. Select a new storage space by means of rotary knob 3. Press the "Save" button again to copy the current job to the new position.

To exit the menu, press the "Esc" key or the "MAIN" key.

15.4 Activate job

To activate existing jobs, shortly press the "Job" button.

You are now in Job selection mode. All available jobs are listed on the display. Select the job to be activated by means of rotary knob 3. Press the job button again or the rotary knob 3 to activate the selected job. The LED on the job button lights up. The job number and job name are displayed in the lower part of the "MAIN" menu. If you want to activate another job, tap the job button again. You are now back in the selection menu.

To exit the job mode, press the job button for more than 2 seconds (the LED goes out). You are back in the job-free mode.

Block 4 Additional information

1. RC Plus (Remote Control)

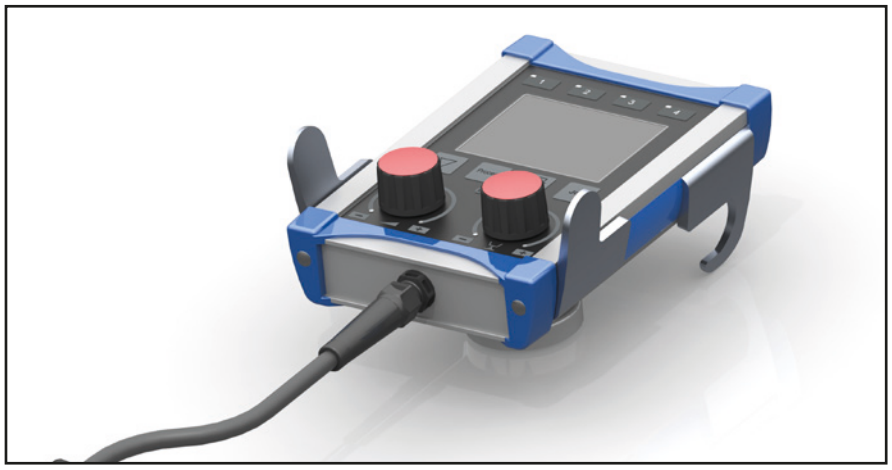

1	Quick save memory keys 1...4
2	Multi-functional key (hold value display, selection actual value display)
3	Selection key Processes
4	Selection key Operating modes
5	Job key (load job, quit job)
6	Display
7	Rotary knob left (capacity adjustment)
8	Rotary knob right (fine adjustment, dynamics)

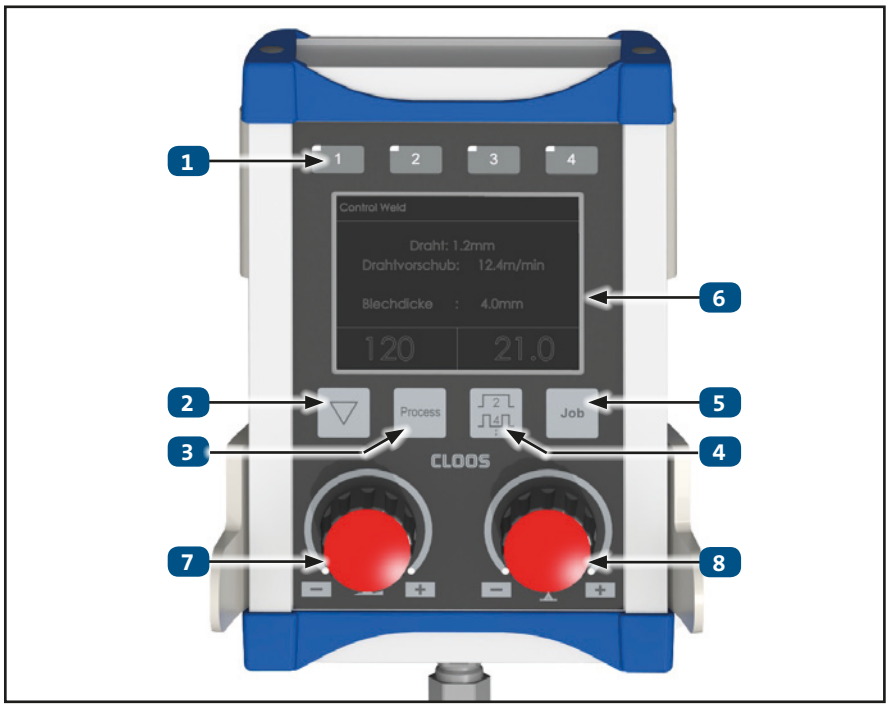

Figure 68. RC Plus

For more information please refer to the separate operating manual.

2. MHW 405 TQ (2-button torch)

Qineo welding power sources can be provided with a remote control on the welding torch. The connection is made via the remote controller socket at the QWD.

Use the configuration menu of the welding power source to determine which of the following parameters shall be changed in which step width and speed by means of the remote control:

- Power
- Fine adjustment (ArcLength)
- Dynamics (ArcDynamic)
- Job

Depending on the operating module, please read the corresponding section of block 3 of this operating manual.

Figure 69. MHW 405 TQ

3. SD module

Each electronically controlled Qineo welding power source can be equipped with a weld data monitoring system (Exception: For devices of the Qineo NexT series, the SD module is included as standard).

If all necessary components are connected to the welding power source, the display of the Premium operating module shows the function "SD monitoring" in the "Main (3)" menu, see Figure 70. If the display shows "SD monitoring" in grey letters, the SD module was not recognised by the controller or is not correctly connected.

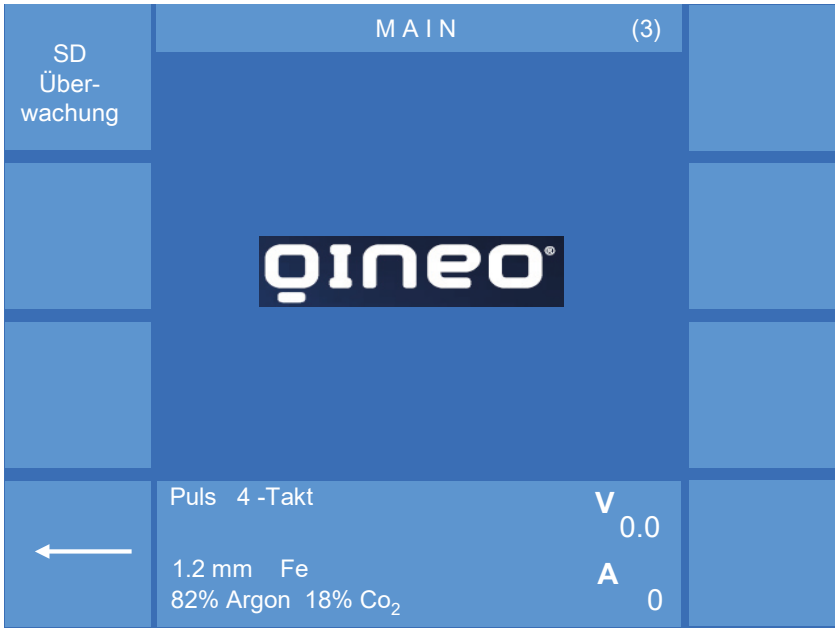

Figure 70. Menu

3.1 Monitoring channels

The following monitoring channels are available, see Figure 71.

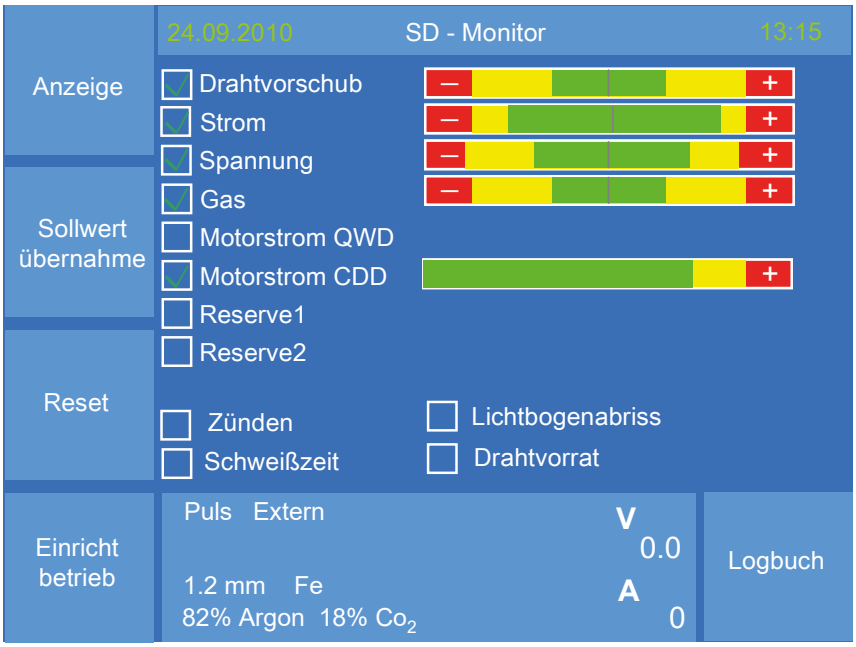

Figure 71. SD menu with selected monitoring channels

- **Wire feed**

This monitoring channel measures the actual wire feed speed at the wire drive rollers. Prerequisite: A corresponding pressure roller with encoder function is mounted in the QN-WF-XX wire feed unit.

- **Current**

This monitoring channel measures the arithmetic average value of the welding current.

- **Voltage**

This monitoring channel measures the arithmetic average value of the welding voltage.

- **Gas**

This monitoring channel measures the actual gas flow quantity in the gas flow sensor.

- **Motor current QWD**

This monitoring channel measures the arithmetic average value of the motor current at the QWD wire drive unit. The set value is constant and cannot be configured.

- **Motor current CDD**

This monitoring channel measures the arithmetic average value of the motor current at the CDD ROB wire drive unit. It may be an indication that the QWD feed capacity is too high if the measured value is below the set value. So the CDD ROB wire drive unit slows down. It may be an indication that the QWD feed capacity is too low or the friction of the wire feed distance is higher if the measured value is above the set value. So the CDD ROB wire drive unit accelerates.

- **WCM**

The circuit generates a signal from the current and voltage curve which allow conclusions regarding the arc quality. The further processing of the signal produces a level which operates in a defined area if the arc is correctly adjusted.

The level of the WCM module changes if the arc is interfered with external influences such as impurities, paint, oil etc.

The WCM function is optional. It is not included in the standard scope of supply of the Qineo welding power sources!

- **Reserve1* / Heat input**

For this monitoring channel two states are available for selection.

The following applies to both states:

By pressing the middle rotary knob the speed for entering data is changed (x10, x100, x1000).

Reserve1* activated:

The input signal is rated for a voltage of 0...10 V. The name and the unit are freely selectable. Via the menu item “Factor(10V)” a scaled value can be allocated to the control voltage 10V. For example: 10 volts correspond to a certain sensor signal.

Heat input activated:

The measured current and voltage values are offset against the wire speed which was determined here and output in kj/cm.

INFO!

The welding speed value is manually entered in the welding power source and does not depend on the actual welding speed. If the actual welding speed is higher than the one determined here, the heat input is lower than the display in the welding power source. If the actual welding speed is lower than the one determined here, the heat input is higher than the display in the welding power source.

- **Reserve2***

The input signal is rated for a voltage of 0...10 V. The name and the unit are freely selectable. Via the menu item “Factor(10V)” a scaled value can be allocated to the control voltage 10V. For example: 10 volts correspond to a certain sensor signal.

- **Ignition**

After the start command given by the robot or the peripheral equipment (PLC), the signal “Arc on” must be transmitted within the selected ignition time from the power source controller to the master controller (robot or PLC).

The welding process is immediately interrupted if the ”Arc on” signal is not given within the preset ignition time and if the channels are set to “Abortion group 1 or 2“. The master controller decides on an abortion if the setting is on “Message group 1 or 2”.

- **Welding time**

Each mechanised weld seam performed by a robot or another peripheral equipment takes a certain time. This time is defined for the present job in the menu item “Welding time”. If during job execution the key “Apply/ Accept set value” is pressed, the required welding time is automatically adopted at the end of the weld seam. Use the arrow keys to enter a limit value (+/-) and a warning threshold (+/-) for the welding time. The welding process is immediately interrupted if the channels are set to “Abortion group1 or 2”. The master controller decides on an abortion if the setting is on “Message group 1 or 2”. The welding times can be added when welding several seams with the same job number. The set value is entered manually via the middle rotary knob.

- **Arc interruption**

The welding process is immediately interrupted if the signal “Arc on“ is interrupted during the welding process for longer than the defined error time and if the channels are set to “Abortion group 1 or 2“. The master controller decides on an abortion if the setting is on “Message group 1 or 2”. You have the option to enter a start delay time in order to avoid that an error message is generated immediately after the ignition process. An error message cannot be generated during the time of the start command and the expiration of the start delay time.

- **Wire storage**

The signal “Wire storage” is a switch (24 V) which is installed at the wire drive unit or the wire drum. The electrical conductivity of the welding wire signals whether wire is available or not. You have the option to enter a start delay time and an error time in order to avoid that an error message is generated immediately after the ignition process. The welding process is immediately interrupted if the channels are set to “Abortion group1 or 2”. The master controller decides on an abortion if the setting is on “Message group 1 or 2”.

***Prerequisite to use the reserve channels**

The prerequisite to use the reserve channels is an optional VBC module (OMI module, Profi-Bus, Profi-Net, Device-Net).

A bus system (Profi-Bus, Profi-Net, Device-Net) is necessary to transmit digital data to the reserve channels of the SD module. The value range is divided into LowByte and HighByte and is preset from 0 to 1000 (decimal). In the configuration file of the corresponding bus system, the reserve channels are determined as follows:

Reserve channel 1 LowByte	Signal type 3, group 7, signal number 9
Reserve channel 1 High-Byte	Signal type 3, group 7, signal number 10
Reserve channel 2 LowByte	Signal type 3, group 7, signal number 11
Reserve channel 2 High-Byte	Signal type 3, group 7, signal number 12

An OMI module is necessary to transmit analogue values to the reserve channels of the SD module. The OMI module has an A/D converter to convert analogue signals from 0...10 V to digital data. These can then be evaluated by the SD module. The reserve channels are determined In the configuration file of the OMI module as follows:

Reserve channel 1	Signal type 3, group 7, signal number 5
Reserve channel 2	Signal type 3, group 7, signal number 6

ATTENTION!

If several modules are combined in one welding power source (e.g. OMI with Profi-Bus), it is important that signals of one group are never divided over both modules. This would result in malfunctions.

INFO!

Please contact the department Technical Documentation of Carl Cloos Schweisstechnik GmbH to get detailed information about the “Qineo Interfaces”.

3.2 Submenus

- **Display**

Change to different views by activating the function.

- **Apply/Accept set value** (during welding)

Activate the function to take over the currently measured actual vales as set values to the activated monitoring channels.

- **Reset / SD special function**

Use this function to reset all error messages triggered during monitoring. The function is not possible during welding!

If you press the menu key for longer than 2 seconds, the menu “SD special function” will open.

In this menu you can:

- Save an SD configuration as “Default values“,
- Load “Default values“ of an SD configuration,
- Enter a component name,
- Reset the seam counter to 0
- Or change the value of the seam counter via the middle rotary knob manually.

You can enter a 20 digit name for a component by means of the “Name” function. The input is finished by pressing the “Enter“ function. The seam counter can be manually reset to any value or to 0 by the “Reset” function, see Figure 72.

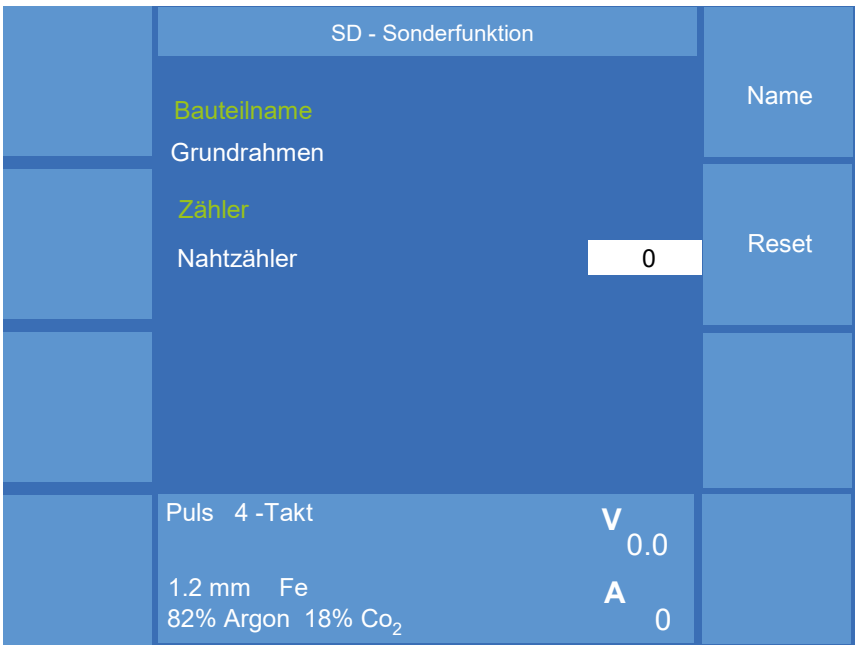

Figure 72. SD special function

- **Set-up mode On/Off**

This function is helpful during set-up mode of components because you can change here the parameters without triggering a warning message or error message which would lead to an interruption of the welding process.

When the set-up mode is “on”, the following signal outputs are ignored:

- Warning messages
- Error messages
- Abort signal

Documentation entries are generated in the logbook, but no error messages. When the set-up mode is “off”, the above-mentioned signal outputs are re-activated.

3.3 Configure monitoring channel

The welding data of the individual monitoring channels can be combined in groups. Thus it is possible to allocate different priorities to the individual monitoring channels.

Turn the middle rotary knob to select a monitoring channel. Press the middle rotary knob to confirm your selection. You enter the menu "SD data", e.g. current, see Figure 73.

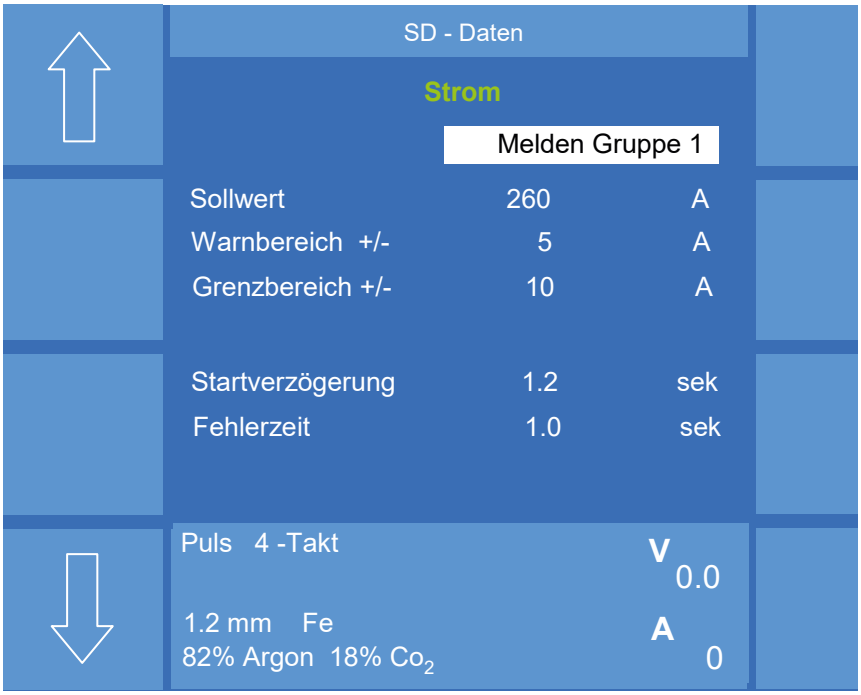

Figure 73. SD data

You can select from the following settings for the individual monitoring channels:

"Off"	Monitoring channel is deactivated.
"Message group 1" or "2"	The welding power source sends a message to a master controller for further processing. The master controller makes the decision (PLC, robot).
"Abortion group 1" or "2"	The welding power source immediately stops welding. The welding power source sends a message to a master controller for further processing.

In both cases, the OMI module or a bus system set digital outputs which can be further processed via peripheral equipment (special purpose machines, carriages or PLC) or a robot controller in a process-related manner.

- **Set value**

The set value indicates the default value.

- **Warning range**

The value, e.g. ± 5 A, indicates the section from the warning range to the limit range where a warning message is displayed in the operating module.

- **Limit range**

The value, e.g. ± 10 A, indicates the range in which an error message is triggered or welding is aborted, depending of the setting.

- **Start delay**

Via the start delay, the monitoring can shortly be deactivated between 0.0 to 99.9 seconds from the time of the monitoring start or after each list change. This is recommended during the ignition and stabilisation phase of the arc to avoid that the monitoring generates unnecessary error messages.

- **Error time**

An error must be existing at least for the duration of the programmed error time in order to be reported as error by the monitoring. The error time can be selected between 0.0 and 99.9 seconds.

3.4 Logbook

A logbook is available in the SD module for the archiving of the weld data. In the “SD monitor” menu you switch to the current logbook display by selecting the “Logbook” function , see Figure 74.

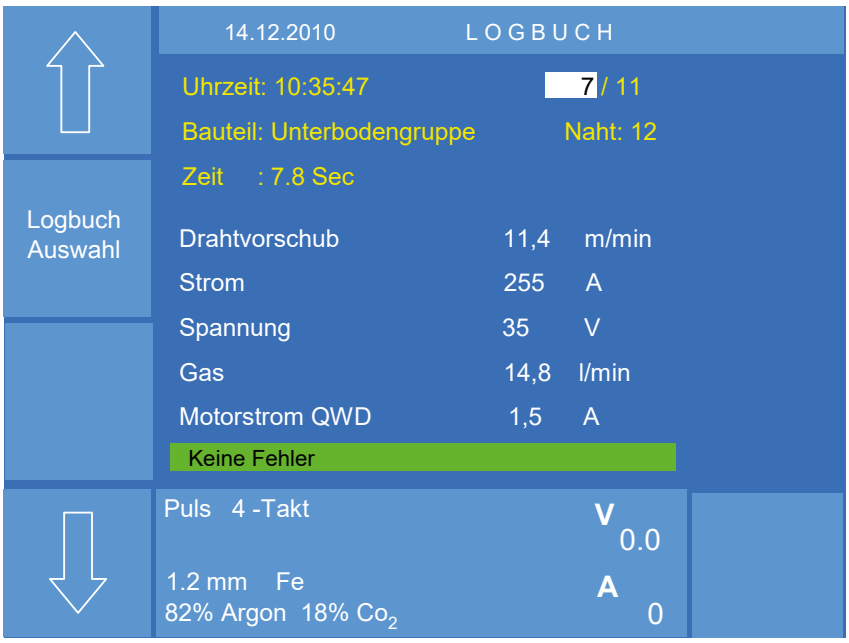

Figure 74. Logbook

Every day, a new logbook is created. You will get into the selected logbook by means of the “Select logbook” function and the middle rotary knob, see Figure 75.

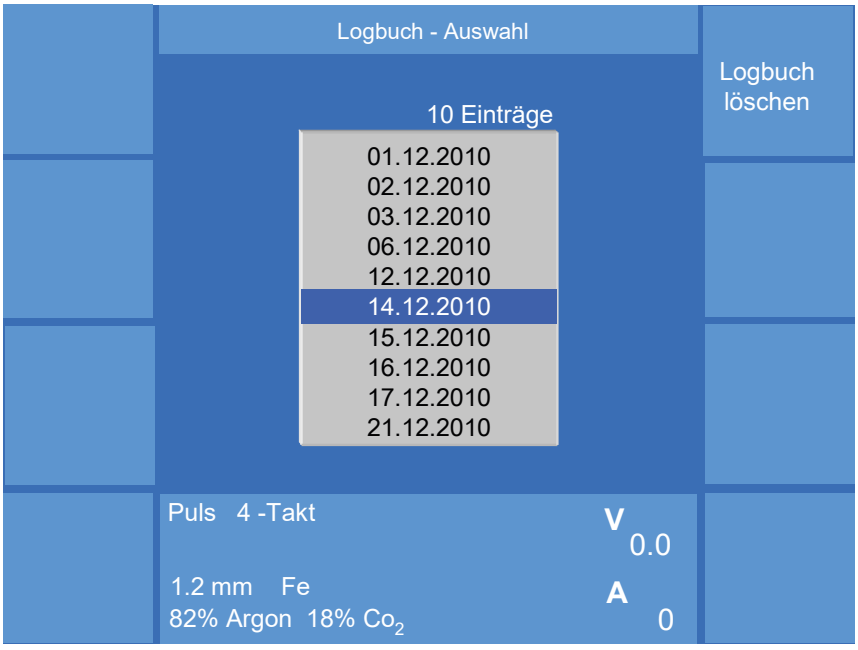

Figure 75. Logbook selection

After each weld seam the data of the activated monitoring channels is automatically entered into the logbook. If a limit value is exceeded, the corresponding monitoring channel is shown in red letters, see Figure 76.

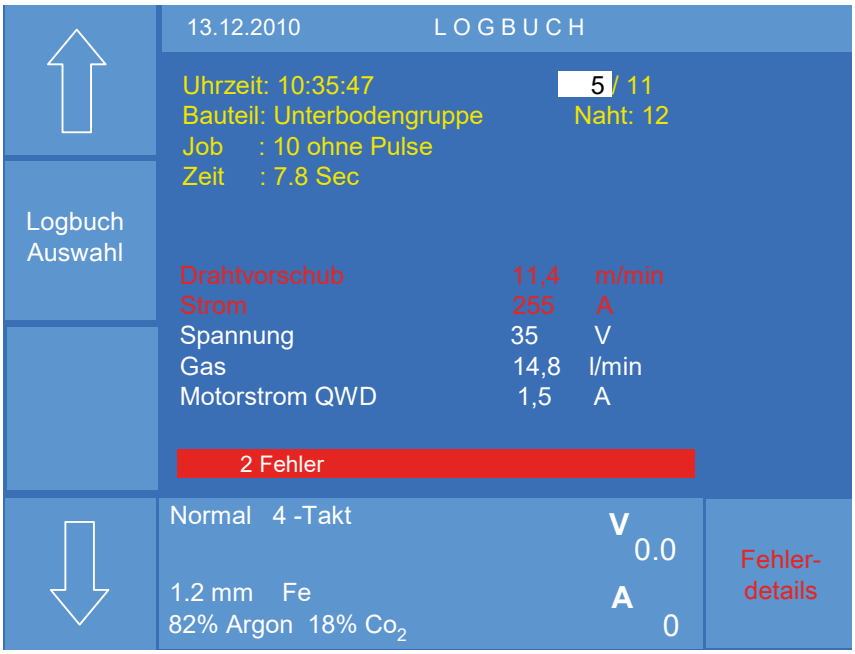

Figure 76. Logbook entry

“Time”	Time of logbook entry
"5/11"	5 of 11 entries in this logbook
“Component”	Freely selected component name
"Job"	Job number and job name
"Period"	Welding period In the case of several jobs within a weld seam, the seam is divided in several sections (section1, section2 etc.). The display always shows the total period from weld start to weld end of one section.

Use the “Error details” function to call up a detailed error description, see Figure 77.

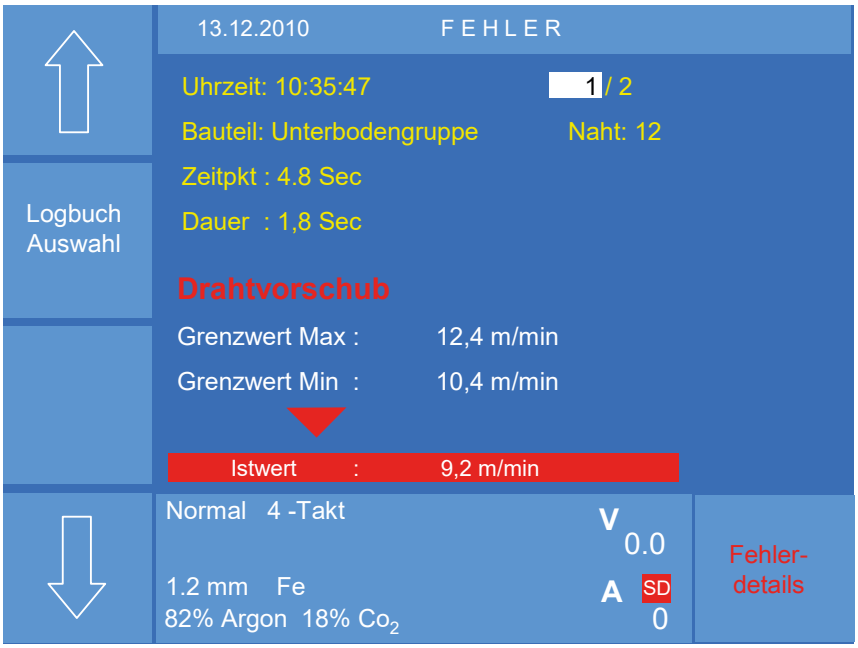

Figure 77. Error details

“Moment”	Moment of error in the weld seam
“Duration”	Error duration

If during welding a limit value of the activated monitoring channel is exceeded but returns to the tolerance range, a new error message is generated.

By turning the middle rotary knob you will get to the next error channel.

3.5 Combine the application example SD monitoring with QIROX controller

Settings on the robot controller

1. Program the list call up by means of “Digital program selection” in the weld parameter lists of the robot.
2. The command FUNCON **SDSTOPCP** must be programmed in the robot's sequence program to ensure that the QIROX robot controller reacts to the SD signals of the welding power source.

If a monitoring channel in the welding power source is programmed to abortion and if the limit range is exceeded, the welding power source stops welding. The robot controller also reacts with a stop command in the program execution.

Detailed information can be found in the QIROX programming manual, block 8.

Settings on the welding power source

1. In the job menu of the welding power source, select a job whose welding parameters you want to monitor.
2. Then open the menu "Main (3)" -> "SD monitoring".
3. Select and confirm a monitoring channel using the middle rotary knob.

The submenu "SD data" opens.

4. Turn the middle rotary knob to allocate a group to the monitoring channel.
5. Use the arrow keys to select the individual parameters. Turn the middle rotary knob to set the value range.
6. Press the middle rotary knob to leave the menu.

Repeat the steps 3-6 for the requested monitoring channels.

7. Activate the function "Set-up mode".

Documentation entries are generated in the logbook, but no error messages. When the set-up mode is “off”, the signal outputs are re-activated.

8. Start the robot program.
9. If the weld parameters of the respective job are o.k., you shortly press the function “Apply/Accept set value” during welding.

The current weld parameters are taken over as set values for the activated monitoring channels.

10. Deactivate the function "Set-up mode".
11. Press the key “Save job” to save the settings.

Repeat the steps 1-11 for all required jobs.

The SD monitoring is now ready for operation and active.

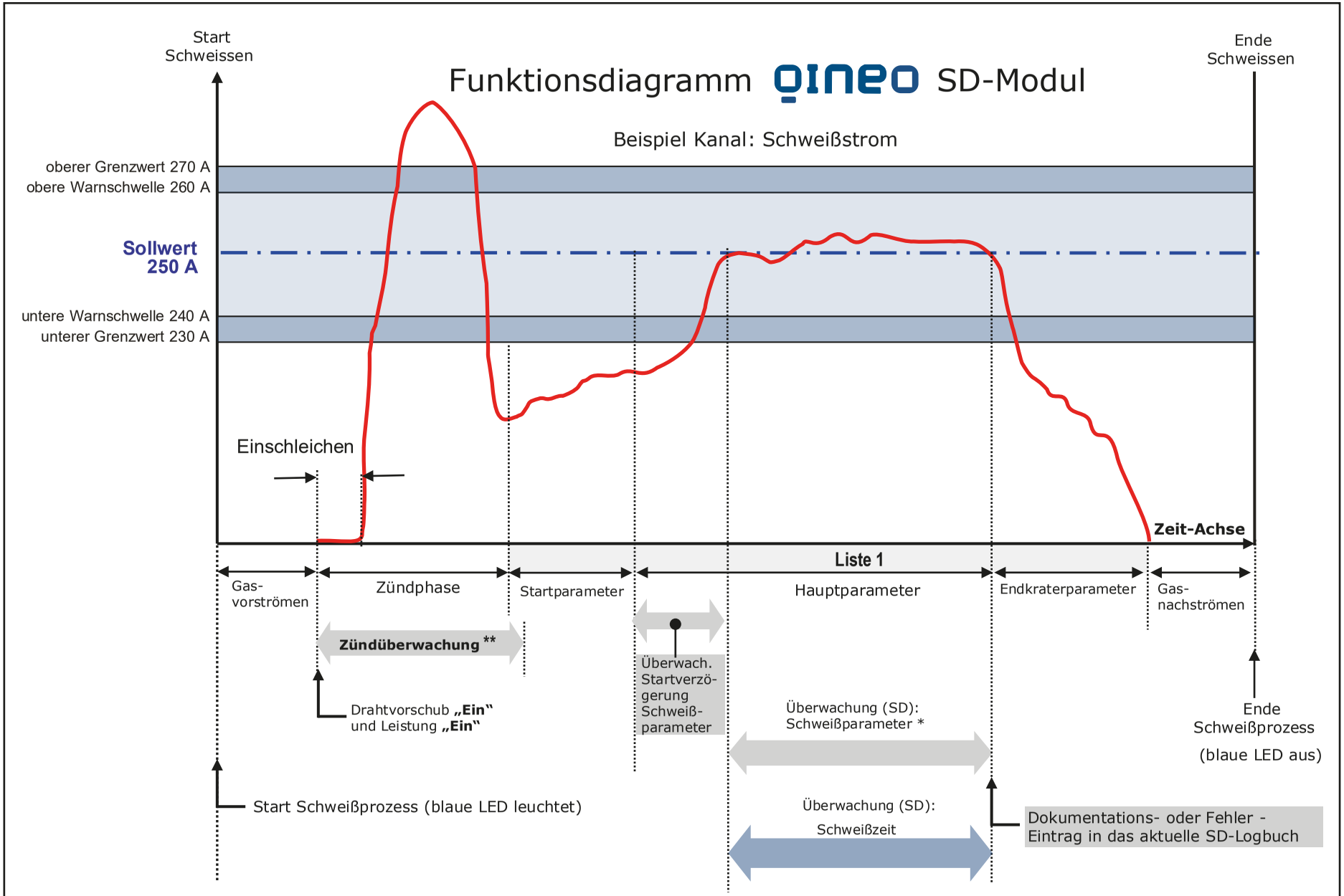

* Schweißparameter: Draht, Strom, Spannung, Motorstrom QWD und CDD, Gas, Drahtvorrat. Für jeden überwachten Schweißparameter kann die Startverzögerungs-Zeit separat eingestellt werden.

** Die Dauer der Zündüberwachung ist abhängig von der eingestellten Zündüberwachungs-Zeit. Kriterium : Lichtbogen steht (I>20A und U>10V) nach Ablauf der Zündüberwachungs-Zeit.

Block 5 Qineo Wire Drive

Contents

1. Technical data 126

1.1 Weight 126
1.2 Dimensions 126
1.3 Ambient conditions 126
1.4 Compatibility list 126

2. QINEO Wire Drive M4 127

2.1 Connection overview M4 128

3. QINEO Wire Drive A4 129

3.1 Structure and function A4 130

4. QINEO Wire Drive AR4 131

4.1 Connection overview AR4 132

5. Function 133

5.1 Button "Gas manually" 133
5.1.1 Adjustment of the gas flow rate 133
5.2 Button "Wire forward" or "Wire backward" 134

6. Commissioning 135

6.1 Safety instructions for commissioning 135
6.1.1 Risks due to mechanical hazards 135
6.1.2 Risks due to electrical hazards 135
6.2 Reducing insert 136
6.2.1 Disassembly reducing insert QWD-M 136
6.3 Installation/change of the wire drive rollers 137
6.3.1 QWD-M 137
6.4 Inserting the welding wire 139
6.4.1 QWD-M 139
6.5 Adjustment of the pressure clamps 141

7. Maintenance 142

8. Error list 143

9. Disposal and Recycling 144

1. Technical data

1.1 Weight

Weight (in kg)	
QINEO Wire Drive M	27,3
QINEO Wire Drive A	9.8

1.2 Dimensions

Dimensions (LxWxH, in mm)	
QINEO Wire Drive M	620x385x255
QINEO Wire Drive A	350x278x230

1.3 Ambient conditions

	Wire feed unit	
	QN-WF-22	QN-WF-32
Transport and storage	-30°C ... +60°C	-20°C ... +85°C
Relative air humidity	up to 90% at 20°C up to 50% at 40°C	

Information on spare parts and consumables as well as circuit diagrams of the individual wire drives and wire feed units can be found in the spare parts documentation for the QINEO welding power source.

1.4 Compatibility list

		Qineo				Qineo Pro		Qineo NexT	
		Tronic	Tronic Pulse	Pulse	Champ	Pulse Pro	Champ Pro	NexT DC	NexT AC/DC
QWD-P	P	x	x	x	x				
	P3	x	x	x	x				
QWD-P Twin	P	x	x	x	x				
	P3	x	x	x	x				
QWD-M	M	x	x	x	x				
	M2	x	x	x	x				
	M3	x	x	x	x				
	M4					x	x	x	x
QWD-A	A	x	x	x	x				
	A3	x	x	x	x				
	A4					x	x	x	x
	A4 (MoTion)							x	x
QWD-AR	AR	x	x	x	x				
	AR2	x	x	x	x				
	AR4					x	x	x	x

2. QINEO Wire Drive M4

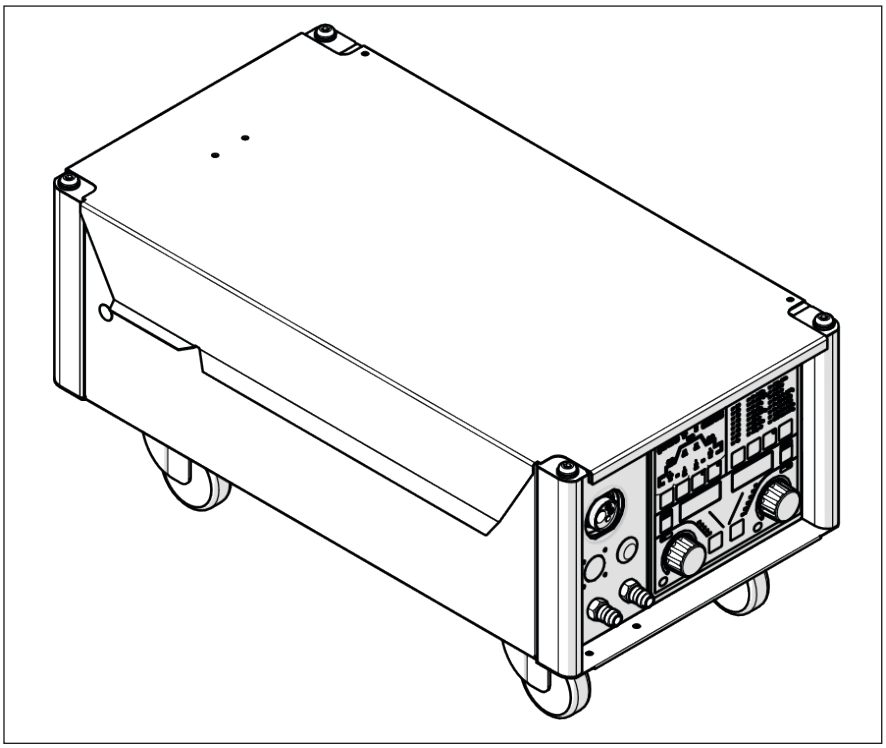

The supporting design of the QINEO Wire Drive Metal consists of a stable sheet steel housing. The corners are provided with 4 aluminium profiles to stiffen the housing.
The interior of the wire drive unit is accessible via a stable cover which is fastened on the housing body by means of solid hinges.
For safety reasons the cover is equipped with a spring damper.
It is suitable for industrial use.

Options:

- Flow meter
- EURO, DINSE connection
- Carriage
- Remote control connection
- Crane support
- Protective shield

2.1 Connection overview M4

1. Torch cable assembly connection
2. Torch cooling flow
3. Torch cooling return
4. Wire inlet
5. Welding current connection
6. Quick coupling cooling return
7. Quick coupling cooling flow
8. Quick coupling gas
9. Socket to control line
10. Optional connection RC module

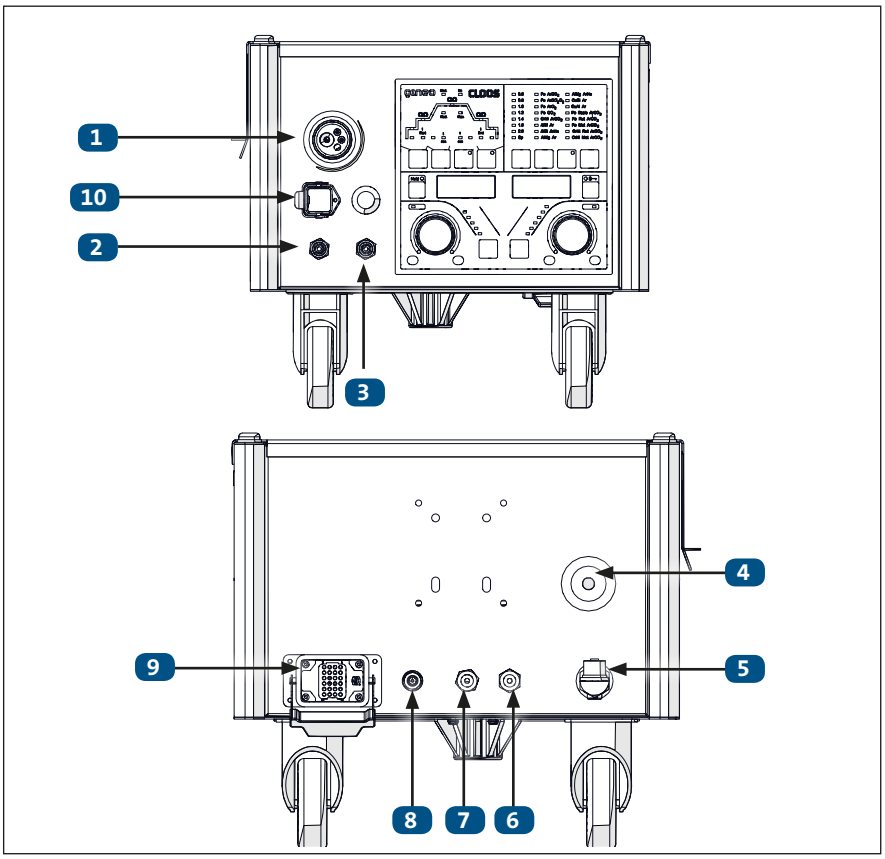

3. QINEO Wire Drive A4

The QINEO Wire Drive A was specially developed for industrial robot applications.

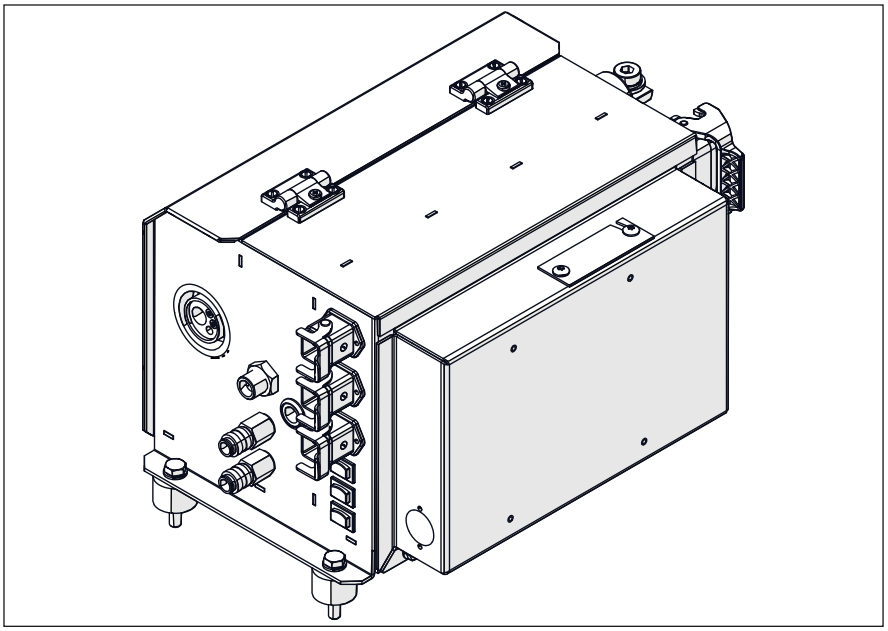

Options:

- EURO, DINSE connection
- Weld data monitoring
- CLOOS Duo Drive (CDD)
- Wire end control

Installation kit A4:

- CLOOS MoTion Drive (MD) (only Qineo NexT)

3.1 Structure and function A4

- **1** Torch cable assembly connection (here: EURO connection)
- **2** "Blow out" connection (for EURO connection)
- **3** Torch trigger connection (for SZ connection)
- **4** MCU connection
- **5** Connection for collision protection, gas nozzle sensor etc.
- **6** CDD/MD connection
- **7** Button "Gas manually"
- **8** Button "Wire forward"
- **9** Button "Wire backward"
- **10** Cooling water connection red
- **11** Cooling water connection blue
- **12** Power connection
- **13** Cooling water connection blue
- **14** QN-WF-22-HD
- **15** Cooling water connection red
- **16** Gas connection
- **17** "Blow out" connection
- **18** Device connection
- **19** Pressure clamps
- **20** Pressure rollers
- **21** Middle wire guide piece
- **22** Wire feed nozzle
- **O1** Key switch Wire end control (optional), see circuit diagram:
  C = contact sensor
  R = ring sensor
- **O2** Wire end control connection (optional)

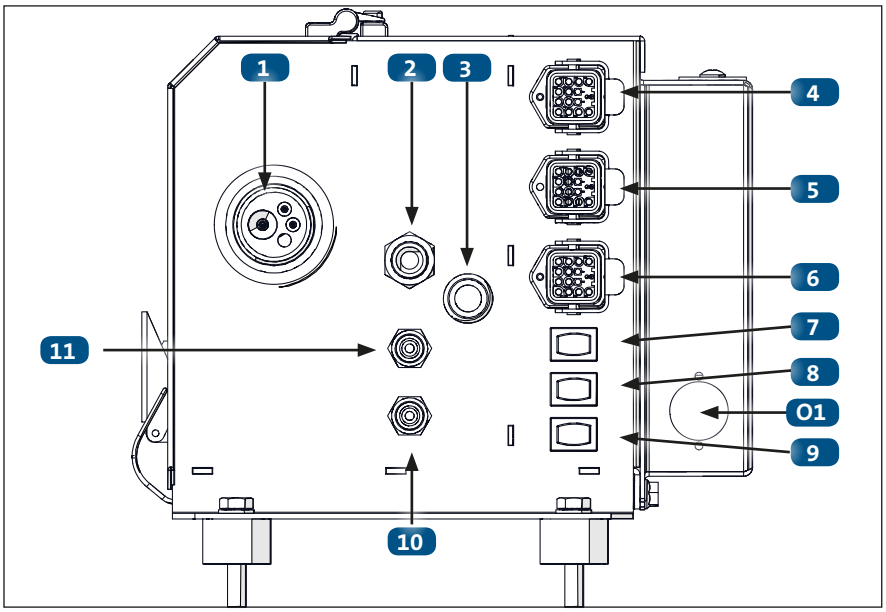

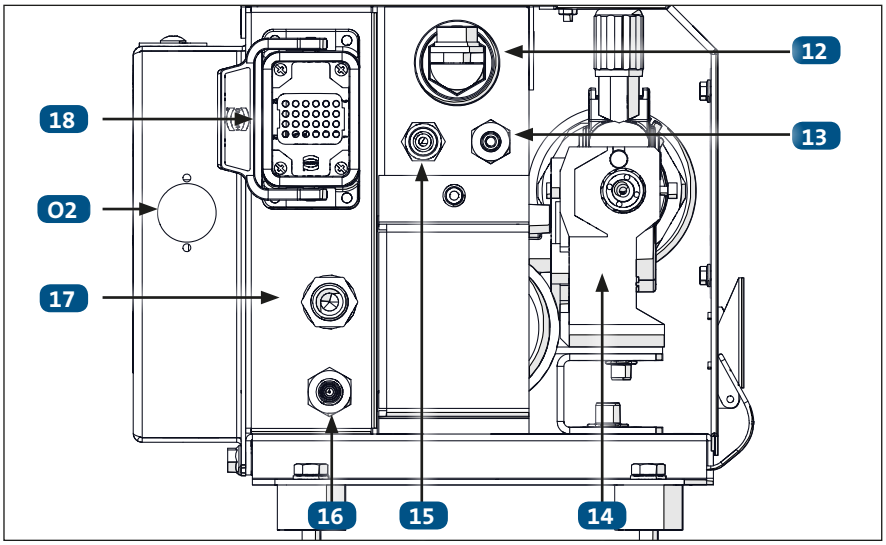

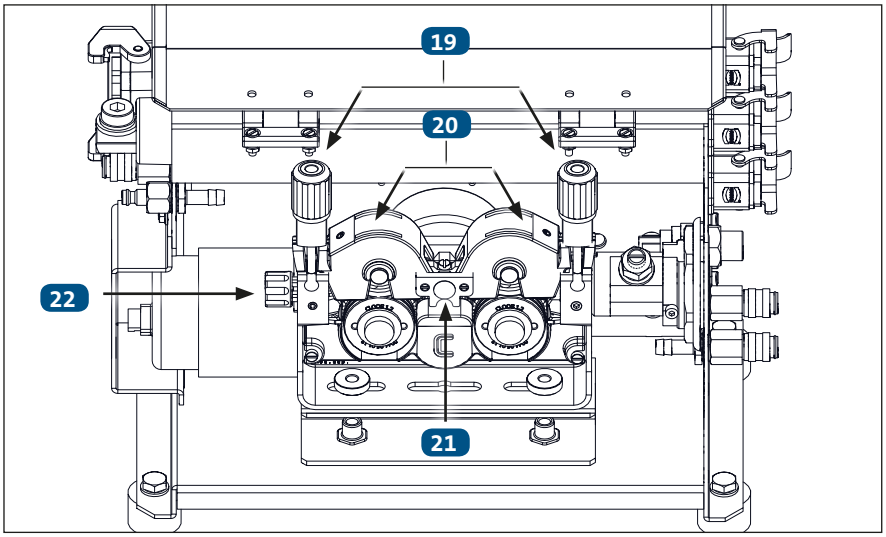

4. QINEO Wire Drive AR4

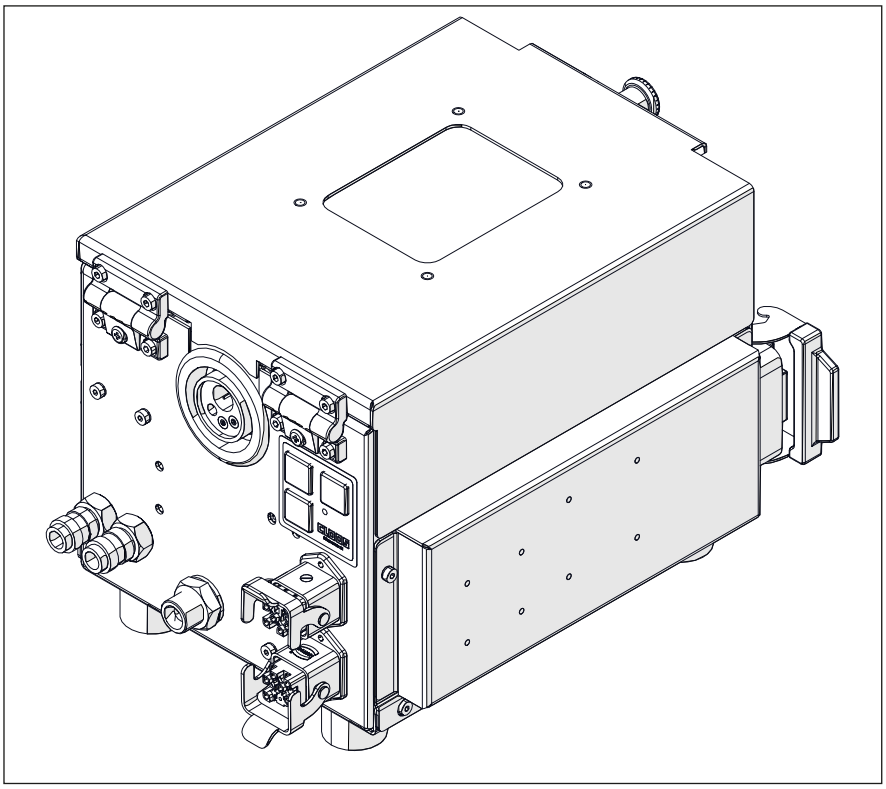

The QINEO Wire Drive AR has been specially developed for mounting on or at the shoulder joint of industrial robots. This ensures an optimum welding wire feed especially in the field of hollow shaft robots. Despite the comprehensive equipment with different sensors for weld data monitoring it is characterised by a low weight and a small size.

4.1 Connection overview AR4

1. Torch cable assembly connection
2. Button "Wire forward"
3. Button "Gas manually"
4. Button "Wire backward"
5. CDD connection
6. Connection for collision protection, gas nozzle sensor etc.
7. Connection nipple "blow out" (optional)
8. Torch cooling flow
9. Torch cooling return
10. Wire inlet
11. Connection nipple "blow out"
12. Cooling water connection
13. Quick coupling water
14. Quick coupling gas
15. Power connection M12x1.5
16. Device connection 24 pole

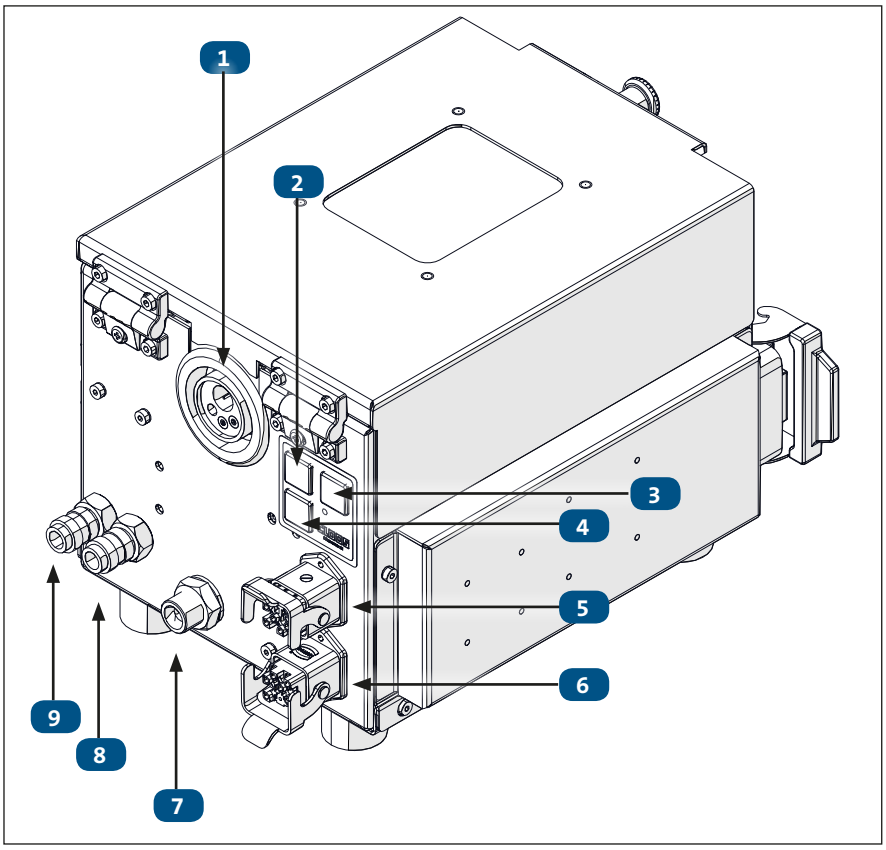

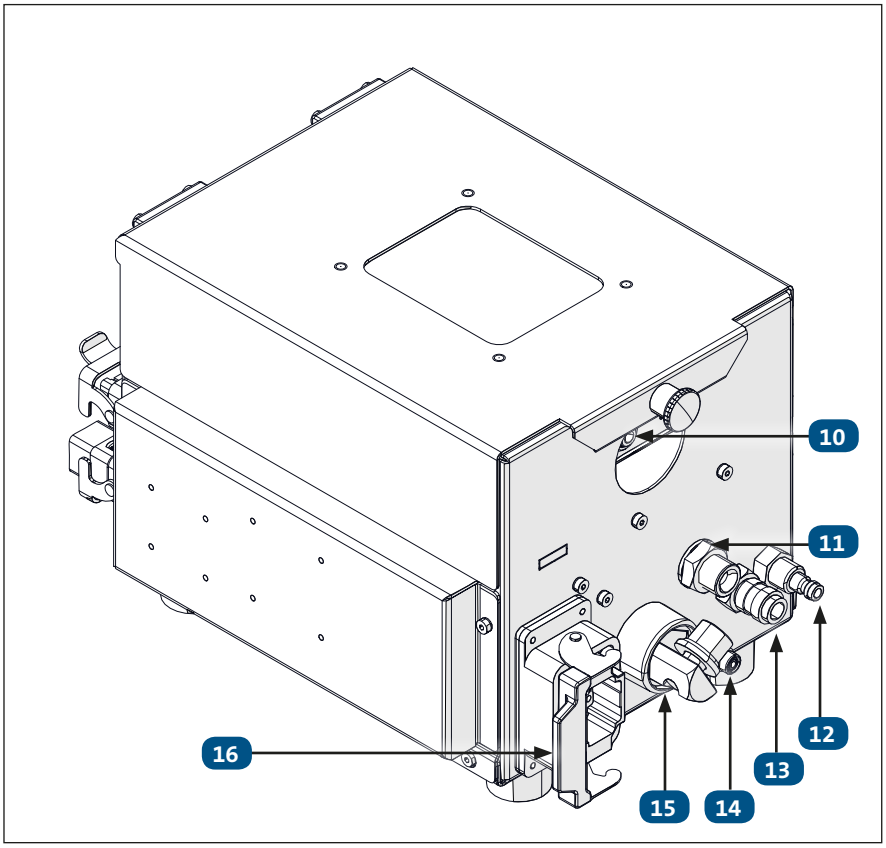

5. Function

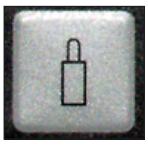

5.1 Button "Gas manually"

For all welding power sources of the QINEO series the button "Gas manually" is designed as a switch.

The gas valve remains open if the button is actuated and released again.

The gas valve is closed by pressing the button again.

This function enables the exact adjustment of the gas flow rate by means of a gas measuring tube.

5.1.1 Adjustment of the gas flow rate

	Designation	Function
	Gas measuring tube	Measurement of the gas escaping at the welding torch.

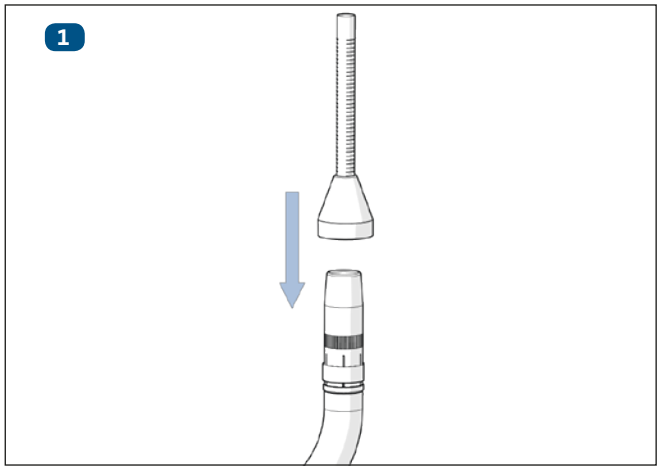

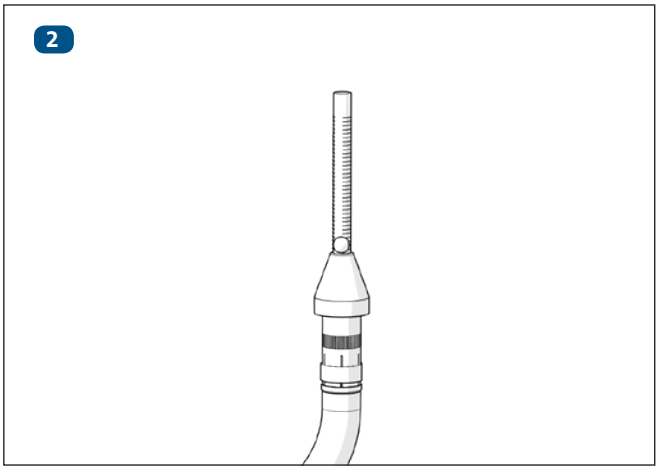

INFO! **Press the button "Gas manually".**

INFO! **Rule of thumb for steel:**

10 x wire diameter in litre / min Example: Wire 1.2 mm = 12 litres / min

Rule of thumb for aluminium:

10 x wire diameter in litre / min +2
Example: Wire 1.2 mm = 14 litres / min

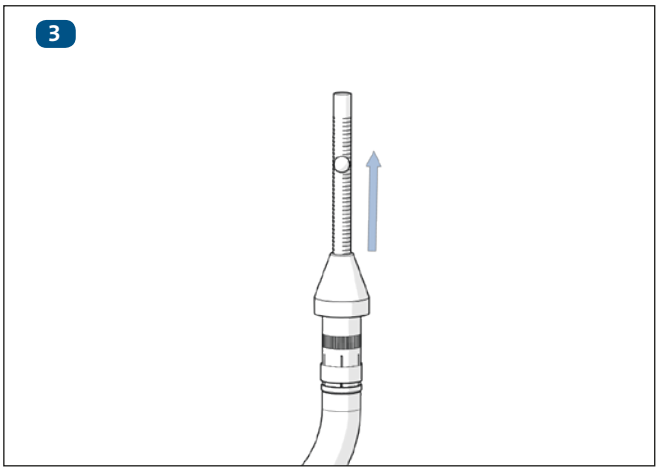

INFO!

Press the button "Gas manually" again to stop the gas flow.

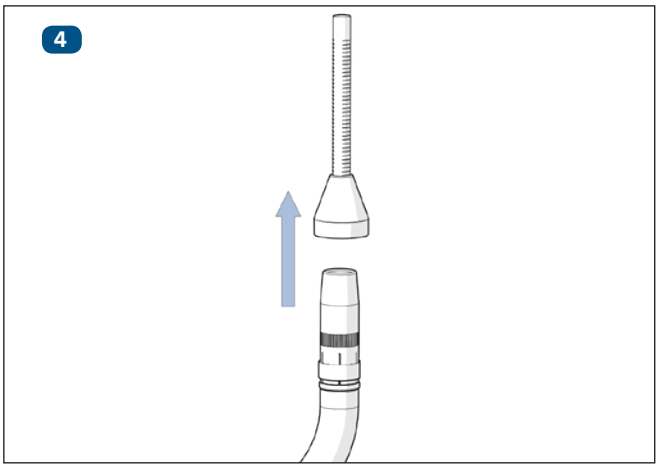

5.2 Button "Wire forward" or "Wire backward"

If one of these buttons is pressed, the wire feed motor switches on and accelerates from 1 m/min to 7 m/min in 3 seconds. The welding wire is fed forward or backward. The buttons are located on the inside or front of the wire drive.

6. Commissioning

6.1 Safety instructions for commissioning

ATTENTION!

The QINEO Wire Drive must not be operated if it has visible damage or defects, which may lead to a hazard:

- **Prior to commissioning the wire drive unit, check to see if the wire guide, the connection line and the casing are damaged.**

6.1.1 Risks due to mechanical hazards

WARNING!

Risk of being pulled in by the drive rollers

Loose clothing, jewellery or long, loose hair can be caught by the drive rollers and cause severe injuries.

- **Wear fitted work clothing.**
- **Do not wear jewellery.**
- **Pull your hair back when working.**

6.1.2 Risks due to electrical hazards

WARNING!

Risk of electric shock

If unrestricted access to the back side of the QINEO Wire Drive is possible, all persons must exercise caution to prevent electric shock or risks from electrical energy.

- **Always disconnect the device when working at the back side of the QINEO Wire Drive.**
- **Even if the QINEO Wire Drive is switched off, it may be under voltage!**
- **Only trained specialists may work on the device.**

6.2 Reducing insert

In all wire drive units the gas-solenoid valve is provided with a mechanical reducing insert having a bore of Ø0.6mm. This insert adapts the gas flow rate at the litre scale of the pressure reducer on the gas cylinder.

In the case that a company is working with a central gas supply (inlet pressure 6 ... 8bar), the welding torch will not be provided with a sufficient gas quantity. Therefore, the reducing insert must be removed.

6.2.1 Disassembly reducing insert QWD-M

	Designation	Function
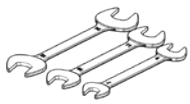	Open-end spanner AF 15	Disassembly and assembly of the gas connection
	Screw M4	Disassembly of the reducing insert

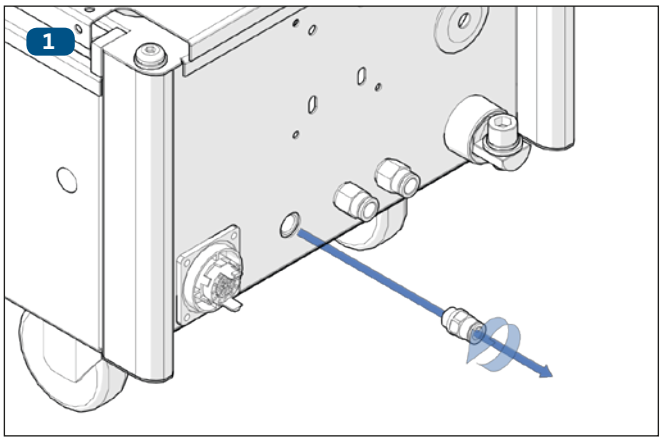

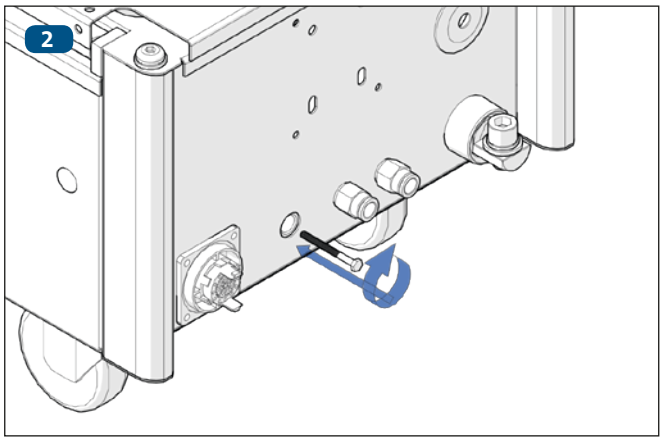

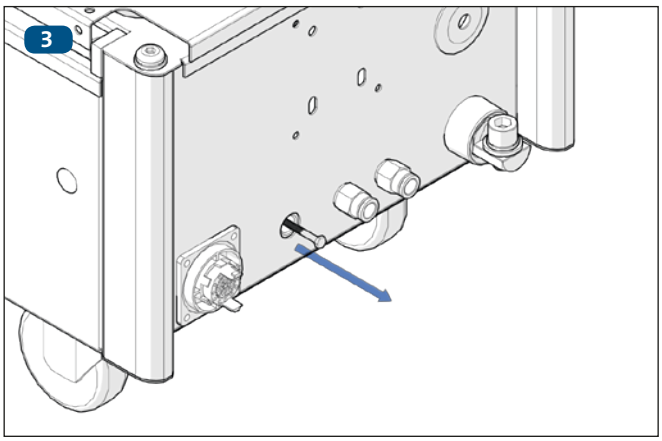

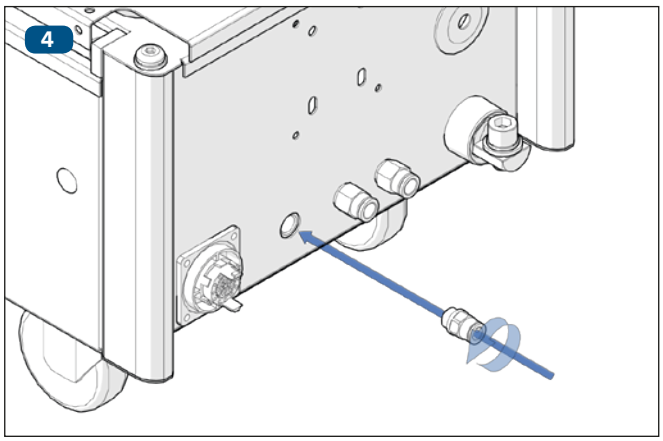

6.3 Installation/change of the wire drive rollers

WARNING!

Stab injury!

In the case of an incorrect handling of the welding torch during the wire feeding process, the wire transport may cause stab injuries on hand, eyes or the face. During the wire feeding, you should always keep the welding torch in a position turned away from the body!

- **Please take care that the current tip is removed from the torch.**

CAUTION!

Isolate the welding power source from the power supply before you start the change.

6.3.1 QWD-M

INFO!

The illustrations may differ from the original.

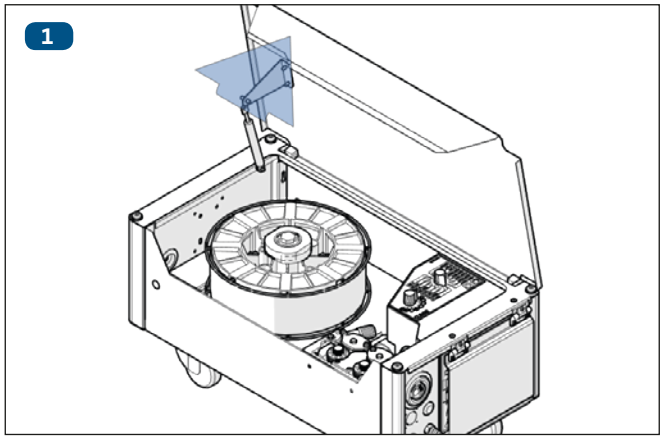

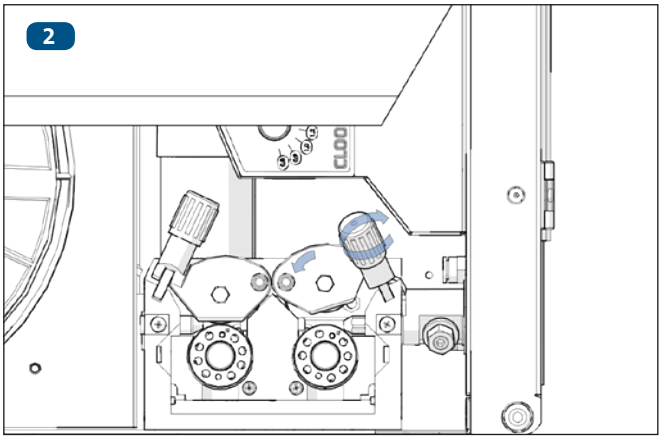

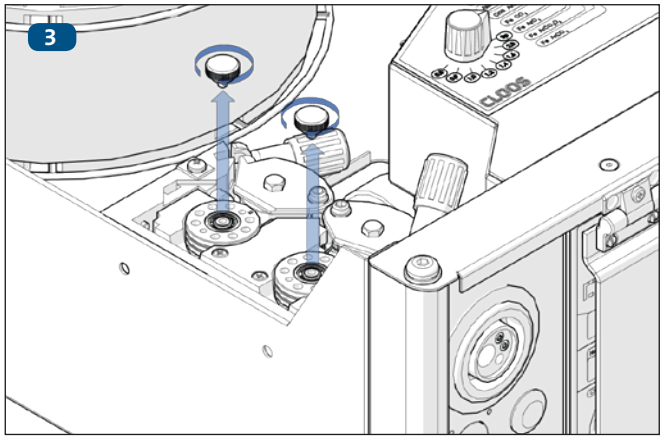

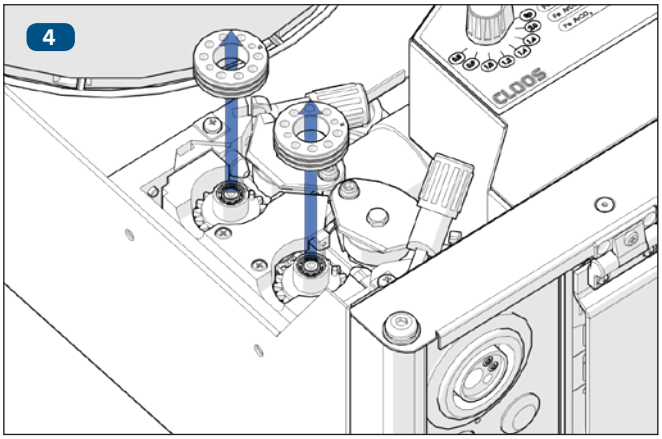

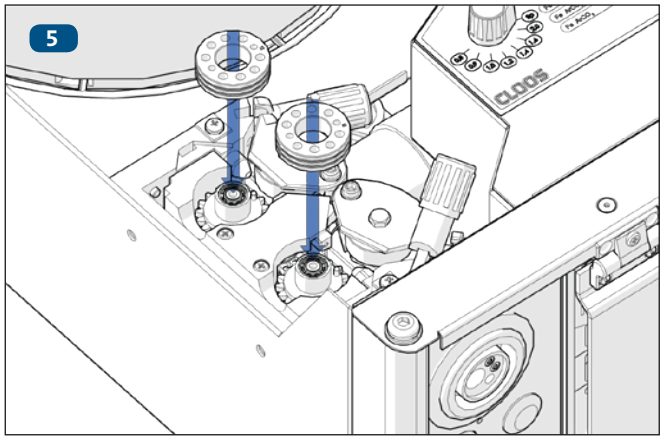
5

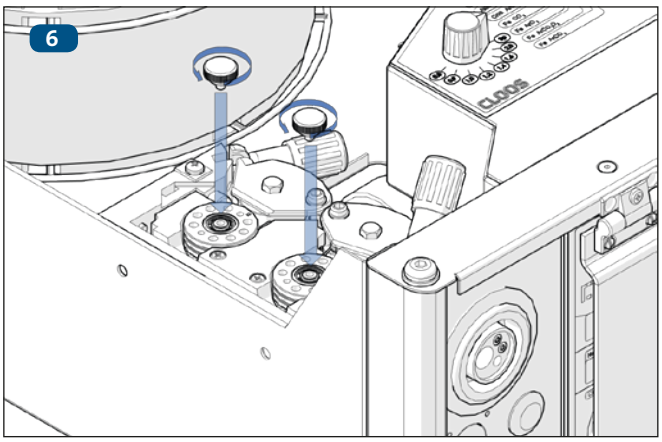
6

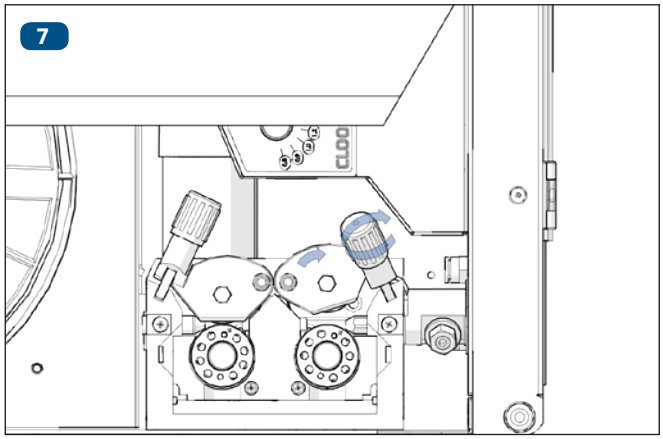
7

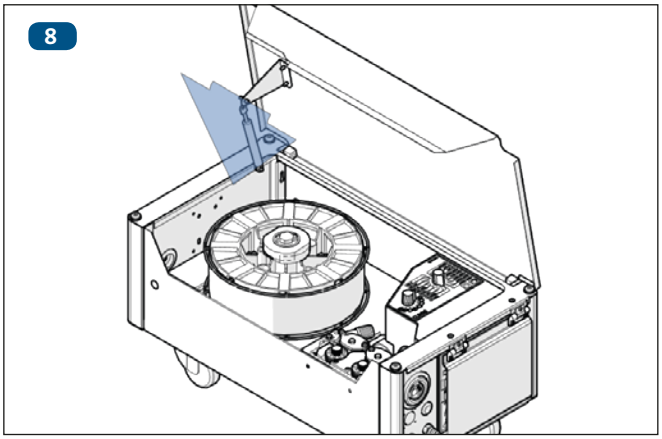
8

6.4 Inserting the welding wire

WARNING!

Stab injury!

In the case of an incorrect handling of the welding torch during the wire feeding process, the wire transport may cause stab injuries on hand, eyes or the face. During the wire feeding, you should always keep the welding torch in a position turned away from the body!

- **Please take care that the current tip is removed from the torch.**

CAUTION!

Isolate the welding power source from the power supply before you start the change.

INFO!

To obtain a perfect welding result, adapt the wire drive rollers, the liner and the current tip to the component to be welded and the used welding wire and diameter.

6.4.1 QWD-M

INFO!

The illustrations may differ from the original.

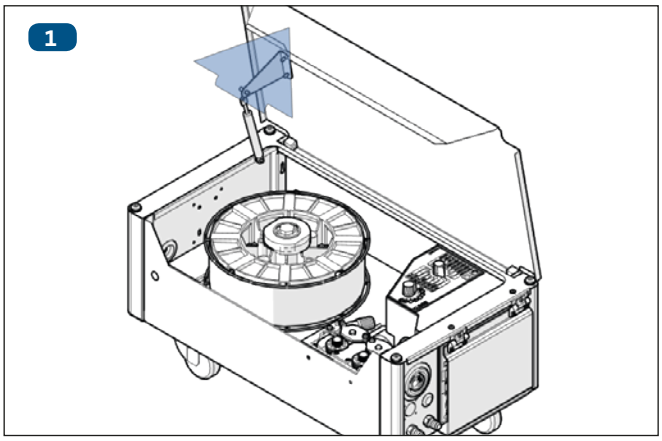

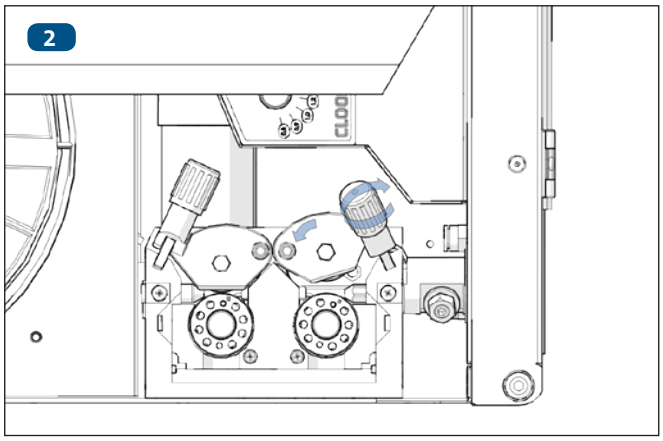

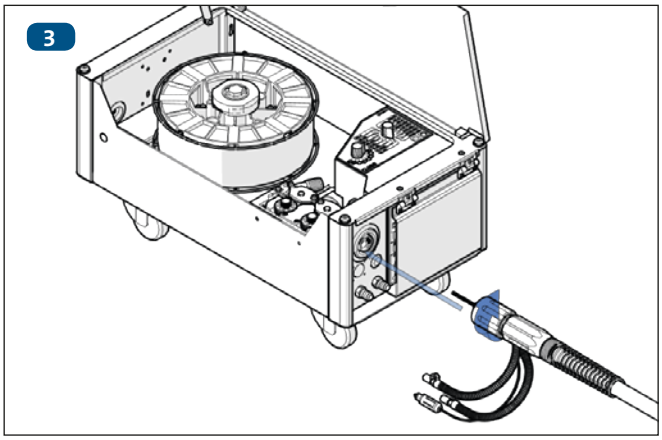

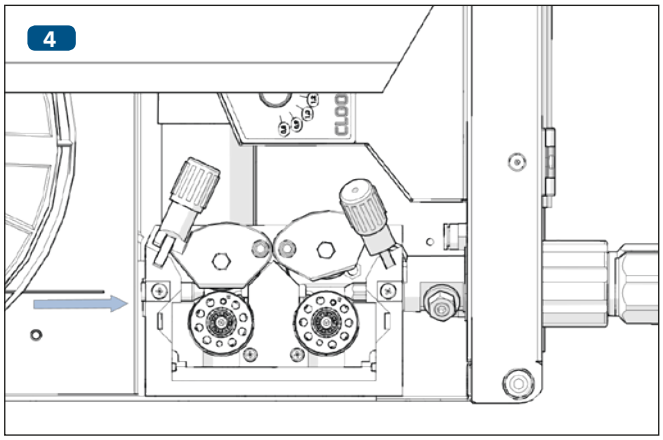

INFO! The wire inlet must not touch the wire drive roller.

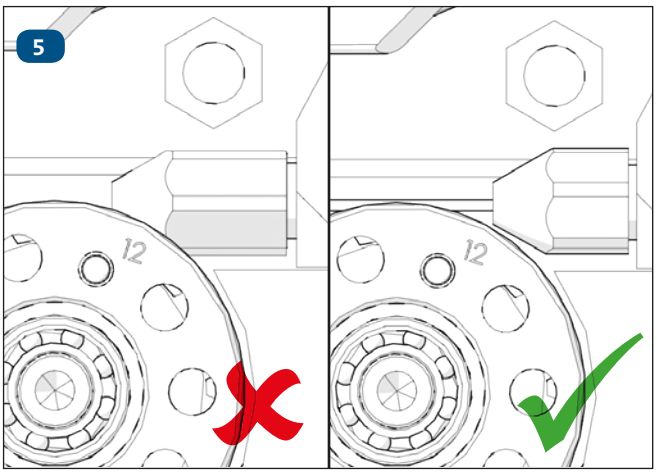

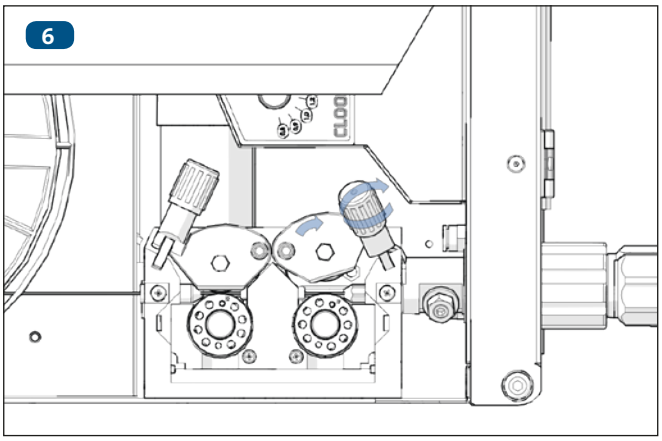

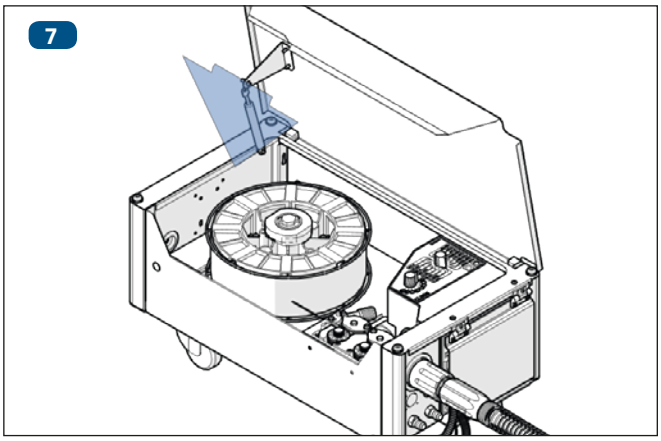

6.5 Adjustment of the pressure clamps

WARNING!

Stab injury!

In the case of an incorrect handling of the welding torch during the wire feeding process, the wire transport may cause stab injuries on hand, eyes or the face.

- **During the wire feeding, you should always keep the welding torch in a position turned away from the body!**

WARNING!

Risk of electric shock

If unrestricted access to the live single parts of the QINEO Wire Drive is possible, all persons must exercise caution to prevent electric shock or risks of electrical energy.

- **Only trained specialists may work on the device.**

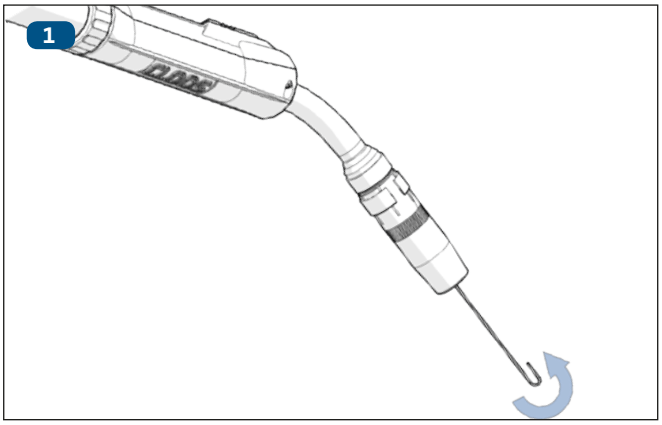

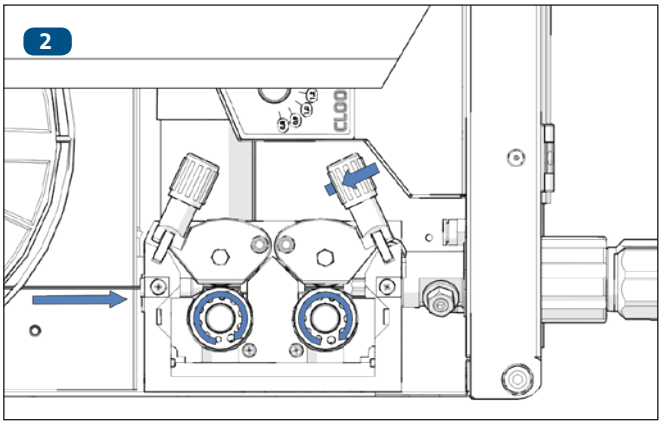

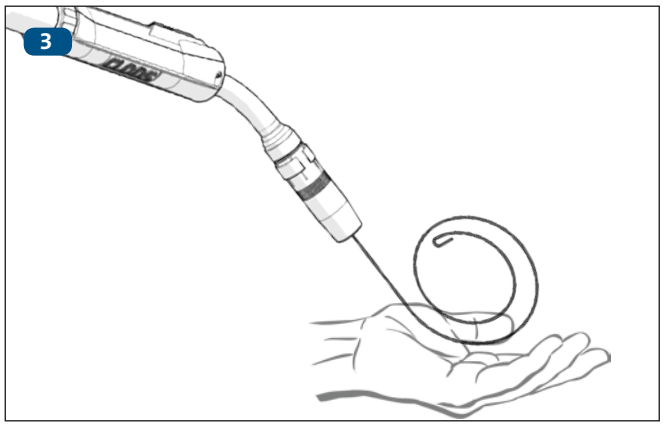

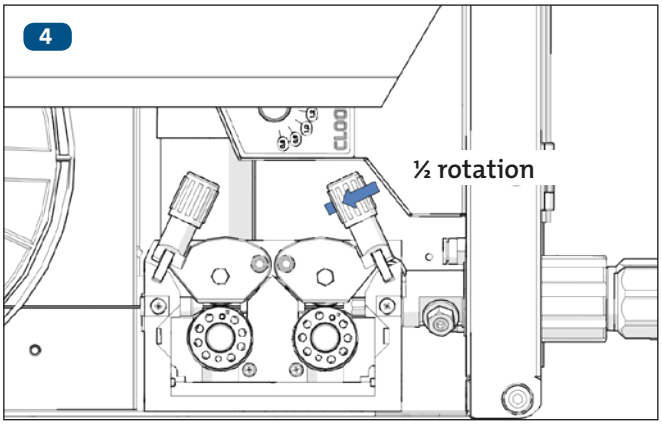

INFO! **The welding wire must not be deformed.**

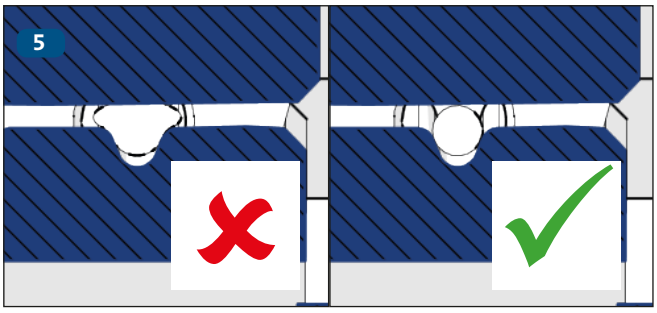

7. Maintenance

The device may not be operated if it has visible damage or defects, which may lead to a hazard:

Prior to each start of the QINEO Wire drive please check:

- The correct mounting of the current tip.
- The correct mounting of the gas nozzle.
- The screw connection of the torch cable assembly at the QINEO Wire Drive.
- The correct fixing of the drive rollers.

8. Error list

Error	Cause	Help
Nest formation of the wire.	Faulty welding wire feed.	Remove the welding wire and insert a new one.
Drive rollers slip and/or the welding wire feed is too slow or does not work.	Wrong pressure adjustment at the pressure clamps. Drive rollers worn.	Correct the pressure adjustment. Change the drive rollers.
Undesired continuous wire feed or gas escape.	Button is possibly stuck because of dirt or deposits.	Check the button and change it if necessary.
Connection to a certain wire drive unit not possible or various CAN bus errors.	Contact pin may be pushed back or wire drive control board is damaged.	Check the pins and fix them, if necessary.

9. Disposal and Recycling

RECYCLING

When using oils and greases make sure that these substances do not harm the paint.
CLOOS assumes no liability of any kind for damages that result from the use of unsuitable consumables!
When handling oils and greases, the safety regulations for the product applicable in the country of use must be observed!
Lubricants may not be disposed of in the sewers or in the regular household waste. These materials must be disposed of in accord with the applicable environmental safety regulations.

You can obtain information about this topic for Germany from, for instance, the Bundesverband der Deutschen Entsorgungs-, Wasser- und Rohstoffwirtschaft e.V. (Federation of the German Waste, Water and Raw Materials Management Industry)

Behrenstrasse 29
10117 Berlin
Germany
Tel.: +49 30 5900335-0
Fax: +49 30 5900335-99
www.bde-berlin.de
info@bde-berlin.de

RECYCLING

Make sure to provide for safe and environmentally sound disposal of consumables and operational materials!

According to European directives (Directive 2002/96/EC of the European Parliament and Council dated 27.01.2003) it is no longer allowed to dispose of used electric and electronic units with the unsorted municipal solid waste. They have to be collected separately.

CLOOS Schweisstechnik participates on an authorised Waste Disposal and Recycling System and is recorded under number WEEE - Reg. No. DE 83919745 in the Register of Old Electronic Appliances.

The device contains valuable raw materials which should be recycled and electronic components that are not allowed to be disposed of as household waste.

RECYCLING

Used coolant must be disposed of correctly as hazardous waste in accordance with the official local regulations. The coolant must not enter the normal waste water system.

Returns can be made to CLOOS directly or to any CLOOS sales partner throughout Europe.
Further information shall be issued by the responsible communal administration.

Block 6a Error messages

1. Error messages

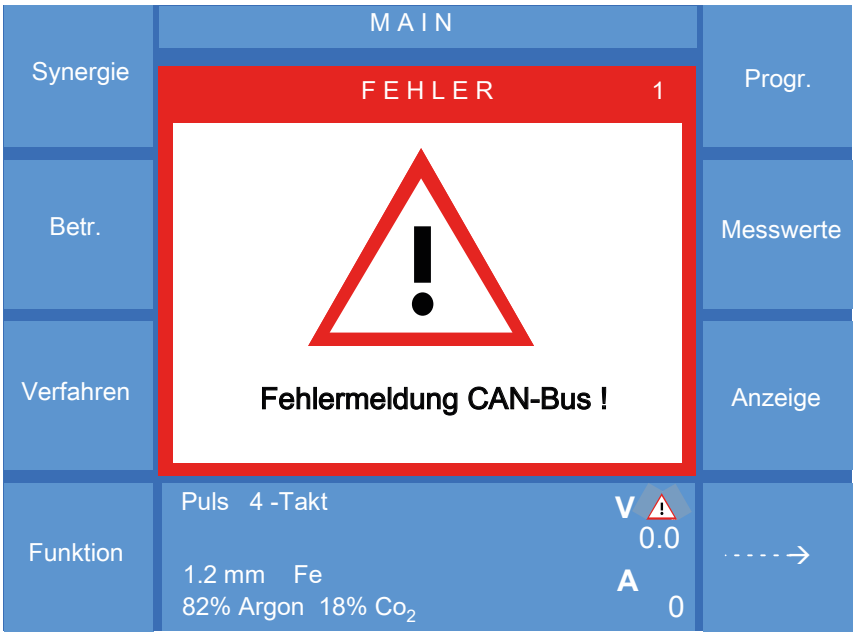

Figure 78. Error message CAN Bus

Operating functions will be maintained, error messages will be displayed until the next operation.

INFO!

If the error message has been acknowledged on the operating module without eliminating the error cause, the error message will appear again after 10 seconds.

1.1 Error list

No.	Error message on the display	Possible cause	Remedy
1	CAN connection faulty	Interruption of CAN bus between control and operating module	→Check plug and connections to the operating module →Service
2	Error when loading the job data of the operating module	Operating module cannot call up the information of the control.	→Switch machine Off and On →Check cable connections →Service
3	Error when loading the minimum values of the operating module	Operating module cannot call up the information of the control.	→Switch machine Off and On →Check cable connections →Service
4	Error when loading the maximum values of the operating module	Operating module cannot call up the information of the control.	→Switch machine Off and On →Check cable connections →Service
5	Error when loading the configuration of the operating module	Operating module cannot call up the information of the control.	→Switch machine Off and On →Check cable connections →Service
6	Error when loading the job list	Operating module cannot call up the information of the control.	→Switch machine Off and On →Check cable connections →Service
7	Error when loading the version data	Operating module cannot call up the information of the control.	→Switch machine Off and On →Check cable connections →Service
8	Error during transmission of the option code	Operating module cannot call up the information of the control.	→Switch machine Off and On →Check cable connections →Service
9	Characteristic curve allocation error (only Eco-Master operating modules)	May appear after loading new characteristic curves if material/gas combinations in the config are set incorrectly.	→Call up characteristic curves again →Check characteristic curve allocation →Service
10	Job does not contain any data	Job does not exist in the controller. May appear in case of external job selection	→Check job selection →Create new job →Service
11	Job has wrong check sum	Error in job file.	→Check job selection →Create new job →Service
14	No valid characteristic curve on weld start	Invalid material/gas combination and/or process selection. • ECO/Master: Material/gas LEDs are blinking. • Premium: Parameters in the main menu are shown in red.	→Select valid characteristic curve →Service
15	Error in the offsets of current and voltage measurement	Error in the digital signal processor (DSP).	→Switch machine Off and On →Service

No.	Error message on the display	Possible cause	Remedy
16	Unknown power class	An unknown or invalid power class was detected. (valid are: 350A, 450A or 600A)	→Switch machine Off and On →Service
17	Weld blocking of operating module	No enable from access management.	→Operating instructions →Service
18	Weld enable is missing	No enable available from the bus system (VBC). No weld enable available (is required for "External start").	→Weld enable →Check VBC →Service
19	Power enable is missing	Signal Arc enable from periphery is missing. Power enable is missing. Is required for each welding process (see circuit diagram).	→Check jumper, close if necessary →Service
20	Water shortage	Optional machine equipment. Low water level.	→Service
21	Low water flow rate	Optional machine equipment. Water flow rate lower than limit value (lines too long).	→Option water monitoring, check water flow rate →Check limit values →Refill coolant, if required. →Ventilate pump. →Check cooling circuit →Service
22	High water temperature	Optional machine equipment. Water temperature higher than limit value.	→Option water monitoring, check water temperature →Check limit values →Refill coolant, if required. →Ventilate pump →Service
23	Arc failure "Process phase"	Arc interruption during the welding process. During welding, the arc parameters fall below a certain level for more than 1 second.	→Configuration menu C48 (ECO / Master) →Check process settings →Check wire drive unit →Check gas →Deactivate process monitoring →Service
24	Arc failure "Ignition phase"	If the arc does not burn within 5 seconds after the start signal.	→Configuration menu C49 (ECO / Master) →Check welding wire / wire drive unit →Service
25	Sense voltage exceeded	Optional machine equipment. Voltage difference between Sense voltage and terminal voltage beyond preset limit value.	→Check Sense voltage →Check earth connection →Check threshold value Configuration menu C55 →Service

No.	Error message on the display	Possible cause	Remedy
28	Error charging circuit on Tronic Pulse	Check cable connection between charging circuit and control computer.	→Service
29	Calibration error Inverter	Zero point adjustment cannot be executed. Values too high. Internal check failed.	→Switch machine Off and On →Service
30	Excess temperature fan	Ambient temperature too high or fan faulty.	→Check air passage and if necessary check filter mat →Service
31	Excess temperature transformer	Ambient temperature too high in connection with too high welding capacity or faulty transformer.	→Check air passage and if necessary check filter mat →Service
32	Excess temperature rectifier	Ambient temperature too high in connection with too high welding capacity or faulty rectifier.	→Check air passage and if necessary check filter mat →Service
33	Excess temperature power unit	Ambient temperature too high in connection with too high welding capacity or faulty power supply unit.	→Check air passage and if necessary check filter mat →Service
34	Excess temperature water pump	Ambient temperature too high or pump runs without coolant or coolant circuit is interrupted, possibly pump faulty.	→Let the machine cool down →Check cooling circuit →Refill coolant →Service
35	Overcurrent inverter	Mains current consumption exceeded.	→Switch machine Off and On →Service
36	Wrong input voltage from inverter	Mains voltage monitoring exceeded. Mains voltage fluctuations.	→Check mains voltage →Service
37	Duty cycle exceeded (inverter)	The output currents listed in the technical data or on the type plate were exceeded.	→ Weld with lower current at the same duty cycle → Weld with the same current at a lower duty cycle
38	General inverter error	Hardware error.	→Service
39	Robot software version out-of-date	Software update required.	→Software update →Service
40	Power unit supply voltage too low	Hardware error.	→Service
41	Software version remote control out-of-date	Software update required.	→Software update →Service
42	Software version SD module out-of-date	Software update required.	→Software update →Service
43	SD module failed	Connection is interrupted or SD module faulty. Possibly software version SD module out-of-date.	→Switch machine Off and On →Check plug and connections →Software update →Service

No.	Error message on the display	Possible cause	Remedy
44	Software version VBC DeviceNet out-of-date	Software update required.	→Software update →Service
45	VBC DeviceNet module failed	Communication between control and DeviceNet module faulty.	→Switch machine Off and On →Check plug and connections (CAN BUS) →Service
46	VBC DeviceNet bus failed	Communication between DeviceNet Master and module (Slave) faulty.	→Switch machine Off and On →Check plug and connections (DeviceNet) →Service
47	Software version VBC ProfiNet out-of-date	Software update required.	→Switch machine Off and On →Check plug and connections →Service
48	VBC ProfiNet module failed	Communication between control and ProfiNet module faulty.	→Switch machine Off and On →Check plug and connections (CAN BUS) →Service
49	VBC ProfiNet bus failed	Communication between control and ProfiNet module faulty.	→Switch machine Off and On →Check plug and connections (ProfiNet) →Service
50	VBC Profibus failed	Communication between control and ProfiNet module faulty.	→Switch machine Off and On →Check plug and connections (ProfiNet) →Service
51	QWD1 failed	CAN connection interrupted.	→Switch machine Off and On →Check plug and connections →Service
52	QWD2 failed	CAN connection interrupted.	→Switch machine Off and On →Check plug and connections →Service
53	QWD3 failed	CAN connection interrupted	→Switch machine Off and On →Check plug and connections →Service
54	QWD4 failed	CAN connection interrupted.	→Switch machine Off and On →Check plug and connections →Service
55	DSP1 failed	CAN connection interrupted.	→Switch machine Off and On →Check plug and connections →Service
56	DSP2 failed	CAN connection interrupted.	→Switch machine Off and On →Check plug and connections →Service
57	IO module 1 failed	CAN connection interrupted.	→Switch machine Off and On →Check plug and connections →Service

No.	Error message on the display	Possible cause	Remedy
58	IO module 2 failed	CAN connection interrupted.	→Switch machine Off and On →Check plug and connections →Service
59	VBC Profibus module failed	CAN connection interrupted.	→Switch machine Off and On →Check plug and connections →Service
60	Software version operating module out-of-date	Software update required.	→Software update →Service
61	Software version QWD1 out-of-date	Software update required.	→Software update →Service
62	Software version QWD2 out-of-date	Software update required.	→Software update →Service
63	Software version QWD3 out-of-date	Software update required.	→Software update →Service
64	Software version QWD4 out-of-date	Software update required.	→Software update →Service
65	Software version DSP 1 out-of-date	Software update required.	→Software update →Service
66	Software version DSP 2 out-of-date	Software update required.	→Software update →Service
67	Software version IO module 1 out-of-date	Software update required.	→Software update →Service
68	Software version IO module 2 out-of-date	Software update required.	→Software update →Service
69	Software version VBC ProfiNet out-of-date	Software update required.	→Software update →Service
72	Robot communication failed	CAN connection interrupted between robot controller and welding power source.	→Switch machine Off and On →Check plug and connections →Service
73	No communication with DSP	Interruption in the CAN bus of the welding power source.	→Check plug and connections →Check settings (set from automatic to manual) →Service
180	Operating module - No memory card found	No memory card or defective memory card in the card slot of the Premium operating module.	→Change SD card →Service
181	Operating module - Memory card not formatted	Unformatted memory card, please format memory card via PC/Laptop.	→Please format SD card again (FAT or FAT 32) →Service
182	Operating module - File could not be opened/ found	Data on SD card cannot be read.	→Check file on memory card →Use new memory card →Service

No.	Error message on the display	Possible cause	Remedy
183	Operating module - Maximum text number in language file exceeded	Language file version newer than machine (not compatible with software).	→Use other language file →Service
184	Operating module - Invalid symbol in language file	Language file version newer than machine (not compatible with software).	→Use other language file →Service
185	Operating module - RAM memory range for language file exceeded	Language file version newer than machine (not compatible with software).	→Use other language file →Service
186	Operating module - No language found	No language file available on memory card.	→Load language file on the memory card. →Service
187	Operating module - Error when transmitting the SD-Min-limit values	Operating module cannot call up the information of the control.	→Switch machine Off and On →Check cable connections →Service
188	Operating module - Error when transmitting the SD-Max-limit values	Operating module cannot call up the information of the control.	→Switch machine Off and On →Check cable connections →Service
189	No enable from control computer	Time of initialisation in control computer exceeded (25 seconds).	→Switch machine Off and On →Check software for compatibility →Service
190	Transmission error logbook	An SD module logbook could not be transmitted correctly.	→Check SD card in SD module →Check plug and connections →Service
191	Unknown error in file system	Access to SD card is not possible.	→Check SD card →Check plug and connections →Service
192	Telegram subsequent error	Error in data transfer.	→Check SD card →Check plug and connections →Service
193	Transmission error from control computer	Error in data transfer.	→Check SD card →Check plug and connections →Service
194	Checksum error during data receipt	Error in data transfer.	→Check job data and then save job again →Service
195	Operating module - Unknown machine type	Read error, old software.	→Switch machine Off and On →Software update →Service
196	Overflow - receive buffer	Error in data transfer.	→Check SD card →Check plug and connections →Service
197	Read error in file	Error in data transfer.	→Check SD card →Check plug and connections →Service

No.	Error message on the display	Possible cause	Remedy
198	Timeout during data receipt	Error in data transfer.	→Check SD card →Check plug and connections →Service
200	SD module - Required logbook not found	Logbook deleted.	→Call up logbook file again →Service
201	SD module Logbook is empty	No data available in the logbook.	→Check SD settings →Start welding process →Service
202	SD module Logbook entry not found	Request of a non-existent logbook entry	→Call up logbook file again →Service
203	SD module Error in logbook	Logbook format error	→Repeat logbook backup →Service
204	SD module sends unknown error message	Software out-of-date.	→Software update →Service
205	Operating module - Error when transmitting the SD configuration	Operating module cannot call up the information of the control.	→Switch machine Off and On →Check cable connections →Service
206	Operating module - SD module not available.	Selected SD module not available or connected.	→Check plug and connections →Check SD module →Service
207	Sector size in data flash exceeded.	File size exceeded. File not compatible with software.	→Service
210	SD module Job not available	Job not available in SD module	→Check job selection →Create job →Service
211	SD module Job has a wrong checksum	Job not available in SD module or faulty. Job format out-of-date.	→Check job selection →Create job →Service
212	SD module- No memory card found	Memory card not available in SD module, faulty or improperly formatted.	→Insert SD card →SD card defective →Service
213	SD module - Memory card write-protected	Memory card in SD module write-protected.	→Check SD card →Change SD card →Service
214	SD module - Memory card full	Data volume limit reached.	→Change SD card →Service
250	QWD1 No controller data available	Error occurs with push/pull torches. Software out-of-date.	→Software update →Service
251	QWD2 No controller data available	Error occurs with push/pull torches. Software out-of-date.	→Software update →Service
252	QWD3 No controller data available	Error occurs with push/pull torches. Software out-of-date.	→Software update →Service

No.	Error message on the display	Possible cause	Remedy
253	QWD4 No controller data available	Error occurs with push/pull torches. Software out-of-date.	→Software update →Service
254	QWD1 Wrong coding	Wrong coding of motor type.	→Check ribbon cable connection from the control to the output stage →Service
255	QWD2 Wrong coding	Wrong coding of motor type.	→Check ribbon cable connection from the control to the output stage →Service
256	QWD3 Wrong coding	Wrong coding of motor type.	→Check ribbon cable connection from the control to the output stage →Service
257	QWD4 Wrong coding	Wrong coding of motor type.	→Check ribbon cable connection from the control to the output stage →Service
258	QWD1 Desired rotation speed not reached	Preset rotation speed not reached. Encoder signals faulty motor movement.	→Check motor movement →Check wire feed distance →Check encoder →Fuse 42V supply faulty →Power supply board →Service
259	QWD2 Desired rotation speed not reached	Preset rotation speed not reached. Encoder signals faulty motor movement.	→Check motor movement →Check wire feed distance →Check encoder →Fuse 42V supply faulty →Power supply board →Service
260	QWD3 Desired rotation speed not reached	Preset rotation speed not reached. Encoder signals faulty motor movement.	→Check motor movement →Check wire feed distance →Check encoder →Fuse 42V supply faulty →Power supply board →Service
261	QWD4 Desired rotation speed not reached	Preset rotation speed not reached. Encoder signals faulty motor movement.	→Check motor movement →Check wire feed distance →Check encoder →Fuse 42V supply faulty →Power supply board →Service
262	CDD1 Desired rotation speed not reached	Preset rotation speed not reached. Encoder signals faulty motor movement.	→Check motor movement →Check CDD →Check wire feed distance →Check CDD cable connections →Check encoder →Fuse 42V supply faulty →Power supply board →Service

No.	Error message on the display	Possible cause	Remedy
263	CDD2 Desired rotation speed not reached	Preset rotation speed not reached. Encoder signals faulty motor movement.	→Check motor movement →Check CDD →Check wire feed distance →Check CDD cable connections →Check encoder →Fuse 42V supply faulty →Power supply board →Service
264	CDD3 Desired rotation speed not reached	Preset rotation speed not reached. Encoder signals faulty motor movement.	→Check motor movement →Check CDD →Check wire feed distance →Check CDD cable connections →Check encoder →Fuse 42V supply faulty →Power supply board →Service
265	CDD4 Desired rotation speed not reached	Preset rotation speed not reached. Encoder signals faulty motor movement.	→Check motor movement →Check CDD →Check wire feed distance →Check CDD cable connections →Check encoder →Fuse 42V supply faulty →Power supply board →Service
266	System - External RAM memory error	RAM chip on control board missing or faulty.	→Service
267	Invalid job number	Invalid job number requested.	→Repeat operation →Service
268	Job not available	A non-existent job has been called up.	→Check available jobs →Service
269	Timeout during data transfer	Error in data transfer.	→Check SD card →Check plug and connections →Service
270	Checksum error during data transfer	Error in data transfer.	→Check SD card →Check plug and connections →Service
271	Wrong file version	File version cannot be processed by current software.	→Check software versions when transferring data from one machine to the other →Software update may be required →Service
272	Error in file format	Faulty file	→Use correct file format →Service
274	QWD1- Overcurrent	Overload results in increased current load of the drive unit.	→Check wire feed distance →Service

No.	Error message on the display	Possible cause	Remedy
275	QWD2- Overcurrent	Overload results in increased current load of the drive unit.	→Check wire feed distance →Service
276	QWD3- Overcurrent	Overload results in increased current load of the drive unit.	→Check wire feed distance →Service
277	QWD4- Overcurrent	Overload results in increased current load of the drive unit.	→Check wire feed distance →Service
278	CDD1- Overcurrent	Overload results in increased current load of the drive unit.	→Check wire feed distance →Service
279	CDD2- Overcurrent	Overload results in increased current load of the drive unit.	→Check wire feed distance →Service
280	CDD3- Overcurrent	Overload results in increased current load of the drive unit.	→Check wire feed distance →Service
281	CDD4- Overcurrent	Overload results in increased current load of the drive unit.	→Check wire feed distance →Service
282	Tandem- Version Slave out-of-date	Software version not compatible.	→Synchronise software →Service
283	Tandem- Slave failed	No connection could be established to the Slave for 2 seconds.	→Check Tandem connection cable →Check Slave →Service
284	Tandem- System not ready	Slave does not send any signals to the control.	→Switch on Slave →Check Slave →Service
285	Pulse synchronisation- Pulse receiver has no input pulse	Pulse generator does not send any input pulse to pulse receiver.	→Check pulse generator settings →Check connection →Service
314	Option chip- No chip found	Option chip not found. (From version X.08 on Option chip inquiry)	→Switch machine Off and On →Check option chip connection →Service
315	Option chip- Data error in chip	Error when importing data in option chip.	→Enter new option chip code →Use new option chip →Service
316	Option chip- Wrong chip	Option chip is not recognised.	→Use new option chip →Service
317	Option chip- Wrong activation code	Wrong activation code entered.	→Check activation code entry →Enter activation code again →Service
334	Unknown password	Password entered not stored.	→Check password entry →Enter password again →Service
335	Unknown user	Selected user is not stored in the welding power source.	→Select user again →Create new user →Service

No.	Error message on the display	Possible cause	Remedy
336	Invalid data set number	Error when creating user.	→Create new user →Service
337	Wrong check sum from user data set	Error in user data set.	→Create new data set →Set up a new PAK
339	User management-Password not allowed	Password entered already in use.	→Enter a new password →Service
350	PAK programming failed	Error when programming the PAK key (e. g. PAK set-up not correct).	→Set up PAK again →Service
351	User management-Locked job range	Locked job range selected.	→Select enabled job →Service
353	User already existing	The user name entered is already in use.	→Enter new user name
354	All user data sets are occupied !	The maximum number of user data sets is reached. No further user data sets will be created from a PAK.	→Remove unused user data sets.
600	Emergency stop		
601	Safety stop		
700	Software version QWD-B1.1 out-of-date	Software out-of-date, minimum V1.00.00	→Check software version →Software update →Service
701	QWD-B1.1 failed		
702	Software version QWD-B2.1 out-of-date	Software out-of-date, minimum V1.00.00	→Check software version →Software update →Service
703	QWD-B2.1 failed		
704	Software version QWD-B3.1 out-of-date	Software out-of-date, minimum V1.00.00	→Check software version →Software update →Service
705	QWD-B3.1 failed		
706	Software version QWD-B4.1 out-of-date	Software out-of-date, minimum V1.00.00	→Check software version →Software update →Service
707	QWD-B4.1 failed		
708	Software version QWD-B1.2 out-of-date	Software out-of-date, minimum V1.00.00	→Check software version →Software update →Service
709	QWD-B1.2 failed		

No.	Error message on the display	Possible cause	Remedy
710	Software version QWD-B2.2 out-of-date	Software out-of-date, minimum V1.00.00	→Check software version →Software update →Service
711	QWD-B2.2 failed		
712	Software version QWD-B3.2 out-of-date	Software out-of-date, minimum V1.00.00	→Check software version →Software update →Service
713	QWD-B3.2 failed		
714	Software version QWD-B4.2 out-of-date	Software out-of-date, minimum V1.00.00	→Check software version →Software update →Service
715	QWD-B4.2 failed		

Block 6b General maintenance instructions

1. Maintenance and Care

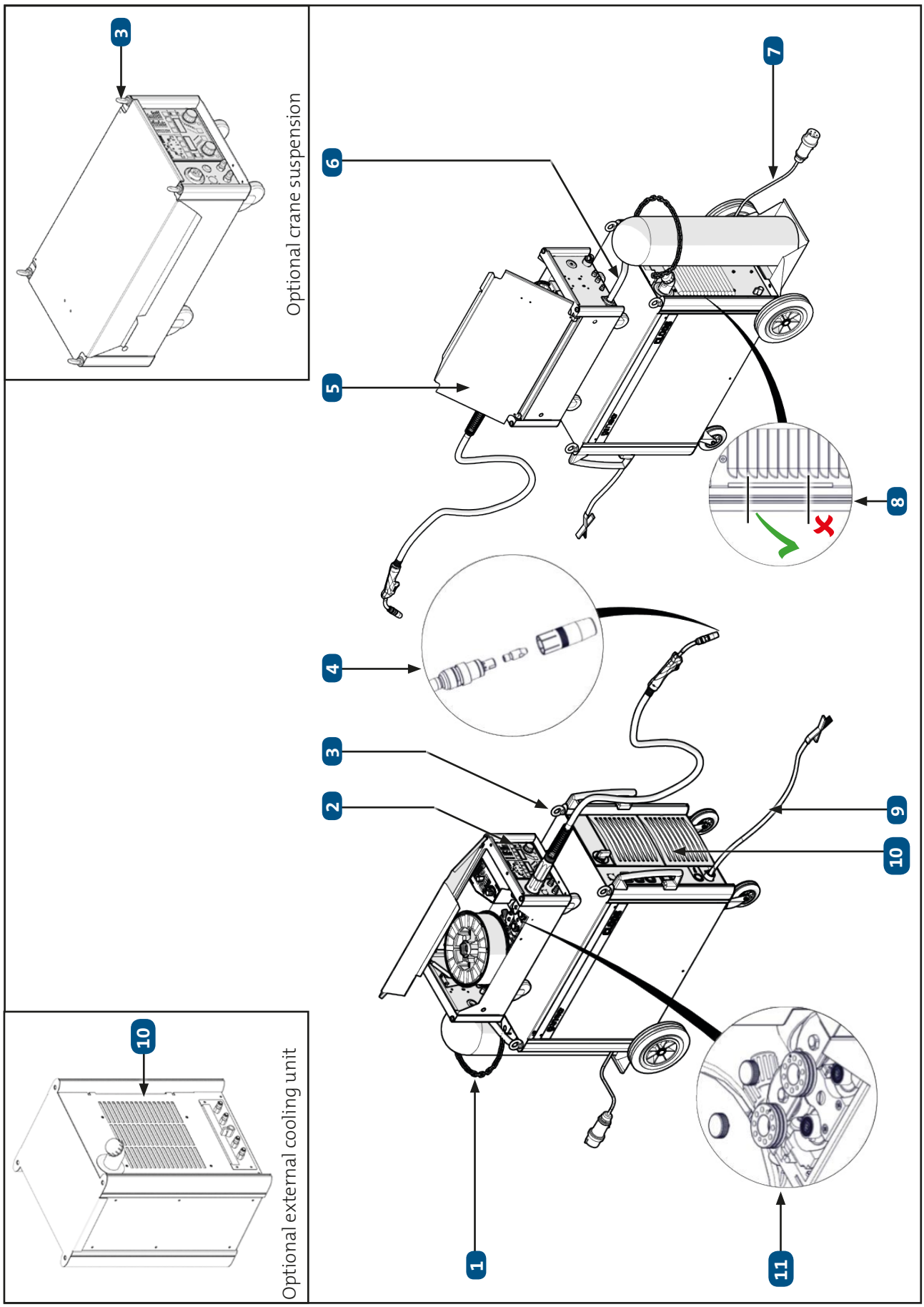

DANGER!

Danger of injury from electric shock

Cleaning/maintenance works at a device which is not disconnected from the electrical power supply may lead to severe injury or even death.

- **Maintenance work on electrical components may only be carried out by specialist electricians.**
- **Before starting cleaning/maintenance, disconnect the device.**
- **Measure the voltage in the intermediate circuit.**
- **Check that the capacitors are discharged. After switching-off the main switch, wait at least 5 minutes.**

1.1 Regular testing

	Control	Remedy
Each time before starting work		
	Damages and professional connection of all mains connections and lines of movable welding power sources.	Contact a qualified electrician.
1	Damage to the gas bottle safety element.	Secure the gas bottle properly from falling.
	The correct attachment and tightness of the gas hoses.	Fix / change the gas hoses / connections.
	The correct gas flow quantity.	Re-adjust the gas flow quantity.
4	Dirt at nozzle base, gas distributor, current tip and gas nozzle.	Clean current tip and gas nozzle from dirt.
	Damages and intact insulation of the torch neck of the manual welding torch.	Contact a qualified electrician.
	The correct attachment of the manual welding torch (central connection).	Re-tighten the fixtures of the manual welding torch.
6	The correct attachment and the external damages of the connection cable assembly.	Contact a qualified electrician.
7	External damage to the mains supply cables.	Contact a qualified electrician.
8	The quantity of the coolant.	Refill coolant. 000010131 = Coolant 5l
9	The intact insulation of the welding power jacks.	Contact a qualified electrician.
	The correct attachment, damage to the earth jack, earth cable and earth clamp.	Re-tighten the fixtures of the earth cable. Contact a qualified electrician.
11	The brake at the wire coil.	Re-adjust the brake.
	The correct position and attachment of the wire coil.	Fix the wire coil.
	The correct attachment of the wire feeding components (wire drive rollers, wire feed pipe, wire inlet nipple, liner).	Re-tighten the fixtures of the wire feeding components. Clean the wire feeding elements.

	Control	Remedy
Weekly		
2	The perfect function of the operating interface, signal and control LEDs.	Contact a qualified electrician.
5	Damage to the housing.	Replace damaged housing parts.
8	The tightness, damages, buckling or pollutions of the coolant hoses.	Attach/change the coolant hoses. Clean the coolant hoses.
10	Pollution of the filter mat.	Clean/replace the filter mat 0095022000 = Filter mat
11	Dirt and wear of the wire feeding components (wire drive rollers, toothed wheels, bearings, wire feed pipe, wire inlet nipple, liner).	Clean/change the wire feeding components.
	Dirt in the wire drive housing.	Remove residuals, dust, dirt from the wire drive housing.

Monthly		
3	The transport devices, as for example the jack rings.	Repair the device.
8	Coolant pollution.	Change the coolant.

1.2 Semi-annual testing

Semi-annual testing by a qualified electrician

1. Disconnect the device.
2. Remove the machine covers.
3. Remove dust inside the device.
4. Check all electrical connections and ensure that all nuts and screws are tightened.
5. Control the consumables of the welding power source for dirt/wear and replace worn parts.
6. Check all PE connections.
7. Put on the covers.

ATTENTION!

Take care that you use the original screws and spring/lock washers to fix the covers.

INFO!

After completion of the above-mentioned works, the welding power source is ready to start.

1.3 Annual testing

INFO!

A repeat test acc. to IEC 60974-4 standard "Periodic inspection and testing" has to be made.

Beside the mentioned testing instructions the corresponding state laws/regulations have to be met.

1.4 Special testing

INFO!

Retrofits made by the customer have to be maintained by the customer.

ATTENTION!

The dirtier the working environment is, the more the welding power source has to be cleaned/maintained.

Every 6 months at the latest.

ATTENTION!

The welding power source must only be cleaned "dry".

1.4.1 Optional filter mat in the cooling unit

Check the filter mat for pollution once a week.

ATTENTION!

The dirtier the working environment is, the more the welding power source has to be cleaned/maintained.

In the case of light pollution, use compressed air to clean the filter mat. If the filter mat is very dirty, change it.

ATTENTION!

Only use original CLOOS parts.

1.4.2 Crane suspensions at the wire drive unit

Check the crane suspensions for damages once a month.

If they are damaged, change the crane suspensions at the wire drive unit.

1.4.3 Electrolytic capacitors of the transistor cascades

Carefully check the state of the transistor cascades, particularly the electrolytic capacitors, for damages during regular cleaning and maintenance.

If you detect damaged electrolytic capacitors in the transistor cascade (pressure safety valve has been activated or electrolyte has escaped) during the inspection or even during the visual check, the transistor cascades have to be replaced.

Block 7 Automation

1. Interfaces

Qineo welding power sources can be extended by interfaces.

The interfaces are used for signal and parameter transmission from the power source to a peripheral equipment such as a robot or other external device.

The following interfaces are available:

- **QOMI Module** (**Q**ineo **O**pen **M**achine **I**nterface)
- **Profibus Module**
- **ProfiNet Module**
- **DeviceNet Module**
- **Ethernet IP Module**

INFO!

For detailed information please refer to the delivered DOKU CD or contract Carl Cloos Schweisstechnik GmbH directly.

1.1 QOMI Module (Open Machine Interface)

OMI is a configurable input/output module with 24 volt digital inputs and outputs as well as 0...10 volt analogue inputs and outputs. It is used as a hardware connection to either a CLOOS robot (QIROX), a robot of another manufacturer or connection to special purpose welding systems.

1.2 Profibus Module (Process Field Bus)

Field buses are industrial communication systems using different media such as copper cables, fibre optic cables (LWL) and radio (wireless). By means of a bi-serial transmission they are able to manage the connection of widely distributed field devices such as robots, power sources or special purpose machinery to a central control and guide system (PLC = programmable logical controller). Field bus technology is intended to replace common central parallel wiring and analogue signal transfer (control voltage 0-10 V) with digital technology.

In the case of the Qineo Pulse A, the Profibus DP is used for the transmission of control signals (process data) between the power source and the periphery (PLC) or the robot controller. The Profibus interface is able to automatically recognise the baud rate (9.6 kBaud – 12 MBaud). The maximum transmission speed for the Profibus is 12 Mbit/s.

1.3 ProfiNet Module

ProfiNet is based on Ethernet TCP/IP and completes the proven Profibus technology for applications where quick data communication in combination with industrial IT functions is required.

The ProfiNet functional class which is used in the CLOOS Qineo machines is ProfiNet IO (decentralised periphery) in performance class RT: Real-Time communication for the I/O data traffic in automation technology.

1.4 DeviceNet Module

In a DeviceNet network up to 64 bus participants with baud rates of 125, 250 or 500 kBaud are able to communicate with each other. The DeviceNet cable provides in addition to the two signals for the data transfer CAN-L and CAN-H two lines for the supply of the DeviceNet bus participants with 24 Volt operating voltage. The bus participants can be supplied with power by bus or an external source. The maximum length of the DeviceNet cable depends on the selected cable type and the baud rate. The installation is carried out in a bus topology - with or without cable branch box - and terminating resistors on both ends. The terminating resistors have a value of 120 Ohm.

1.5 Ethernet-IP Module

The Ethernet/IP Gateway is a slave with which QINEO power sources can be connected to an Ethernet/IP field bus. So master controllers such as robots or PLC can be controlled.

The Gateway converts to a Profibus Master and can thus forward the signals to the QINEO power source. For that the power source must be equipped with a VBC Profibus module.

2. QIROX Technology Interface (QTI)

2.1 Software compatibility

Depending on the software version of the QINEO welding power source, a distinction is made between protocol type 1 and protocol type 2.

- QINEO welding power sources with a software version lower than X.11.XX support the protocol type 1.
- QINEO welding power sources with a software version equal or higher than X.11.XX support the protocol type 2.
- From QIROX software version V 8.1 on, valid from 25.09.2015, the robot controller recognises the software version on the welding power source and automatically selects the protocol type.

2.2 Assignment of protocol type for Tandem operation

Software version Master	Software version Slave	Protocol type
>=xx.11.xx	>=xx.11.xx	Protocol type 2
< xx.11.xx	< xx.11.xx	Protocol type 1
< xx.11.xx	>=xx.11.xx	Protocol type 1
>=xx.11.xx	< xx.11.xx	Error situation

INFO!

It must be observed that in Tandem operation, welding power sources with the protocol type 1 only support the Tandem process "Tandem job selection". Welding power sources with protocol type 2 support additional welding processes such as "Tandem f/-f".

2.3 Additional welding processes protocol type 2

Processes	Synergic operation	Expert mode
CW-S-Pulse	x	
Cutting		
Tandem job selection	x	x
Tandem f/-f*	x	x

* Tandem f/-f stands for leading / following and is specified by the additional parameter "Auto. Tandem change of direction". For the automatic reversal of direction, the leading and the following wire must be specified. The specification is entered in the TCP window. Hereby, in the event of a reversal of the direction of welding, the welding parameters for leading and following wire are switched. For further information, please refer to the QIROX programming manual, Block 7a, chapter "Tandem f/-f".

2.4 Control of communication between welding power source and robot

The connection status is displayed in the menu "Diagnostics (2)" -> "Robot". Read more information in chapter “Diagnostics Robot (from x.11.30 on)” on page 101.

3. Basic configuration Operating mode "Tandem"

3.1 Connection diagram

This connection diagram shows how to connect two welding power sources, the robot controller and several wire drive units to a changing system with a Tandem and single wire torch.

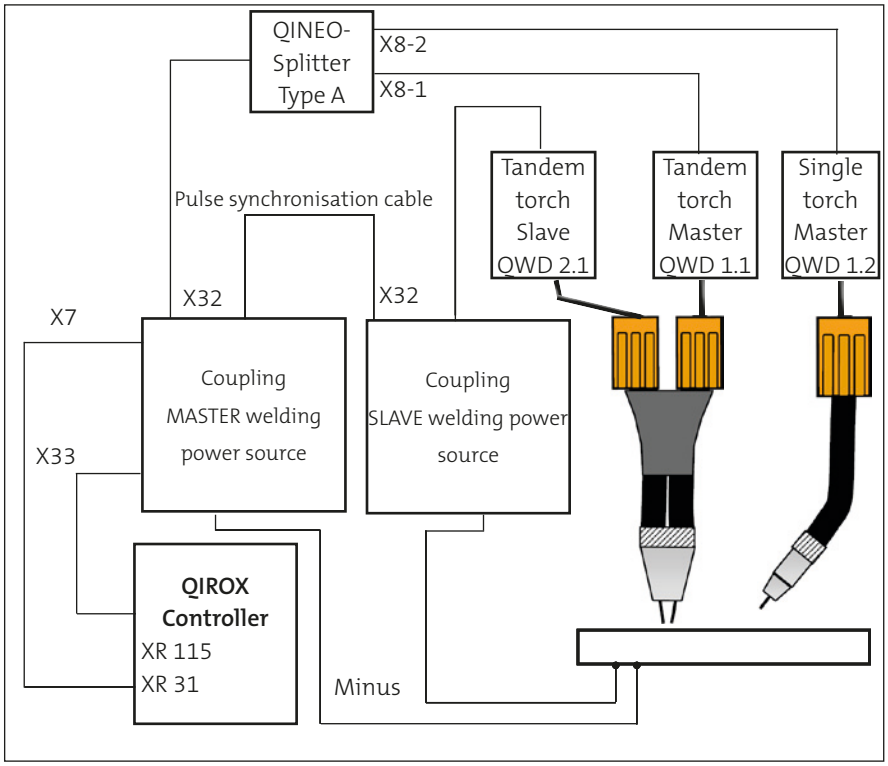

Two welding power sources are coupled via a data line, a so-called pulse synchronisation cable. One of the two welding power sources is configured as Master and communicates with higher level systems, for example with a robot. The second welding power source is configured as Slave and is only connected with the Master welding power source.

3.2 Conditions

All welding power sources involved fulfilled the following conditions:

- PREMIUM operating module
- Software option "Tandem"
- Software option "Pulse synchronisation"
- Are connected with each other via a pulse synchronisation cable (part no.:831 05 90 55, 5 m)
- Software option "Seam tracking"
- Software option "Ethernet (QDM)"

3.3 Pre-adjustments

3.3.1 QIROX robots

To activate communication between robot and welding power source via CAN interface, the following entry in the welding parameter list is required: "FUNCON WPS, 1".

Only the following parameters are available in the welding parameter list of the QIROX robot to control the QINEO welding power sources:

- Selection of the welding power source type (welding power source number 3711):
  "QINEO PULSE/CHAMP TANDEM (CAN)"
- Digital program selection

INFO!

The digital programs correspond to the jobs in the welding power source.

- **Wire drive unit 1**
  (always master welding power source, but depending on the welding direction, sometimes at the front, sometimes at the back side)
- **Wire drive unit 2**
  (always slave welding power source, but depending on the welding direction, sometimes at the front, sometimes at the back side)
- **Arc adaptation 1**
  (always master welding power source, length correction,
  + = more wire, shorter arc)
- **Arc adaptation 2**
  (always slave welding power source, length correction,
  + = more wire, shorter arc)
- **Dynamics 1**
  (always master welding power source, arc character,
  + = narrow, powerful arc, mostly higher frequency)
- **Dynamics 2**
  (always slave welding power source, arc character,
  + = narrow, powerful arc, mostly higher frequency)

3.3.2 QINEO welding power sources

- **Jumper settings for "Power enable"**

The jumper must be bridged according to the application.

Jumper open = "OFF"	External control of the "Power enable" signal + external safety device
Jumper closed = "ON"	Internal control of the "Power enable" signal + internal safety device

Take note of the following jumper on the respective control board:

Type	Jumper
QINEO Pulse / Pulse PRO	J7
QINEO Champ / Champ Pro	J3
QINEO Tronic / Tronic Pulse	J30
QINEO NexT	J1

ATTENTION!

If several welding power sources are used simultaneously for the same application, the jumper settings must match for all welding power sources.

Depending on the application, the following menu items must be considered in the "Config" --> "General" --> "Basic settings" menu, see figure.

External process selection

Name	Function
"Off"	• If two different processes are executed at the same time with a Tandem torch. • If variants of synergy characteristic curves are used. • If a correction value for Up-Slope or Down-Slope was set and the robot changes the process during operation. The correction value is also taken over for the following process! If you do not want this behaviour, we recommend to change the process via a job change.
"On"	• If the robot shall pre-set the welding process.

Number of control voltages

Name	Function
"0"	• If the robot shall only set the job number, but no other parameters.
"2"	• If the robot shall set the two parameters “Arc length” and “Power”.
"3"	• If the robot shall set the three parameters “Arc length”, “Power” and “Dynamics”.

When Tandem welding with pulsed arc processes, the pulses can be synchronised differently, see chapter “4. Pulse synchronisation” on page 178.

A welding power source supports up to four wire drive units. Thus different welding torches and/or welding wires can be used for a Tandem process.

3.4 Job programming QINEO welding power sources

3.4.1 Select operating mode "Tandem"

INFO!

At the Master machine, and only there, different operating modes can be selected for the Tandem process.

Operating mode "Tandem"

Name	Function
"Tandem"	Tandem operation: The two welding power sources weld, the two gas valves open, the two arcs are monitored, the two welding power sources are monitored.
"Master single wire S torch"*	Only master welds: A gas valve opens, only the "master arc" is monitored, the two welding power sources are monitored.
"Master single wire T torch"**	Only master welds: Both gas valves open, only the "master arc" is monitored, the two welding power sources are monitored.
"Slave single wire S torch"*	Only slave welds: A gas valve opens, only the "slave arc" is monitored, the two welding power sources are monitored.
"Slave single wire T torch"**	Only slave welds: Both gas valves open, only the "slave arc" is monitored, the two welding power sources are monitored.
*S torch = single wire torch, **T torch = Tandem torch	

In the "Tandem" operating mode, the "S-Pulse" and "MAG Normal" processes can also be used to select which of the two welding power sources shall send the seam tracking signal (arc sensor).

INFO!

It is recommended that always the welding power source sends the seam tracking signal instead of the robot. For this, configure the welding power source which is placed in front of the welding direction.

Seam tracking signal

Name	Function
"Master machine"	Seam tracking signal of the Master welding power source.
"Slave machine"	Seam tracking signal of the Slave welding power source.

3.4.2 Adjustment of the synergy variant

Both Tandem welding power sources have exclusive synergy characteristic curves optimised for Tandem welding.

In the "Synergy variant" menu you determine the synergy characteristic curves to be welded by the Qineo welding power source.

If Tandem synergy characteristic curves are available in the combination of process, material, wire and gas, one "Tandem leading" variant is available for the wire in front, and a second "Tandem following" variant for the wire in the back (seen in welding direction).

For questions about the supported combinations, please contact CLOOS, department for Application Engineering.

The single wire process variants are named "Standard".

INFO!

It is recommended to adjust the option "Tandem following" in the slave welding power source if "Tandem leading" is active in the master welding power source and vice versa. Deviations are possible depending on the application.

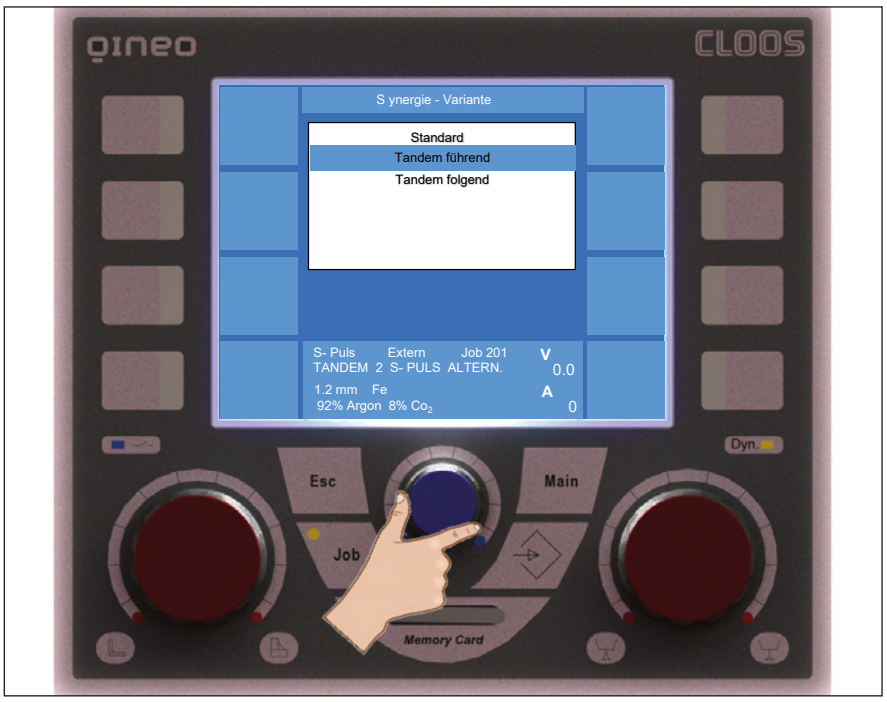

Synergy variant

Name	Function
"Standard"	The synergy characteristic curve has been developed for single wire processes.
"Tandem leading"	The synergy characteristic curve has been developed for Tandem processes for the welding wire in front (seen in welding direction).
"Tandem following"	The synergy characteristic curve has been developed for Tandem processes for the welding wire in the back (seen in welding direction).

3.4.3 "Active QWD" setting

A welding power source supports up to four wire drive units.

Single wire processes can be executed in Tandem mode either with a Tandem torch or a standard MIG/MAG torch. As an example, the Tandem torch is connected to "QWD1" and a single wire torch to "QWD2". With a corresponding torch changing system you can automatically change between the torches.

INFO!

Precondition:

- **All torches are connected with the welding voltage.**
- **The QWD corresponding to the used torch is activated in combination with a torch changing system.**
- **Welding power source has recognised QWD.**

CAUTION!

When a QWD is activated, wire is fed from the torch in the case of a welding start! There is a risk of:

- **Injury by the sharp wire tip**
- **Electric shock when touching the wire**
- **Arc formation between wire and machine parts**

qineo
CLOOS
PROGRAMMIEREN
Stell-
bereich
Startleistung
Expert
Mode
- 0 -
6
6.0 m/min
Dyn.
2
Tandem
Aktiver
QWD
Impuls-
Sync.
Puls 4 -Takt
V
0.0
1.2 mm Fe
82% Argon 18% Co2
A
0
Dyn.
Esc
Main
Job
Memory Card

qineo
CLOOS
Programmieren – Aktiver QWD
Aktiver QWD
QWD-Nummer
1
Puls 4 -Takt
V
0.0
1.2 mm Fe
82% Argon 18% Co2
A
0
Dyn.
Esc
Main
Job
Memory Card

In the menu "Programming - Active QWD" you determine which QWD is actuated by the welding power source.

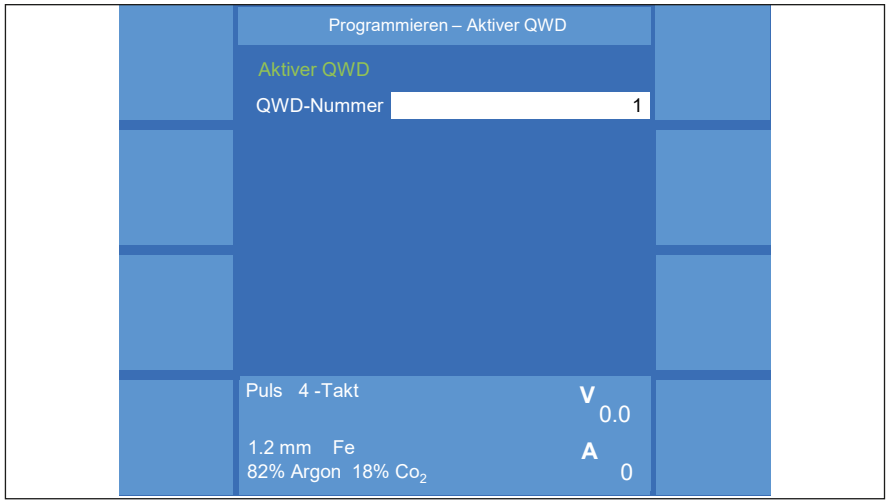

Name	Function
"QWD number" 1...4	The welding power source activates QWD1...4 for welding.

4. Pulse synchronisation

Pulse synchronisation means the time synchronisation of two or more pulse currents. The pulses are synchronised to constantly reduce the unavoidable mutual interference to a level as low as possible.

The pulses of the welding power sources can be configured as follows:

- always at the same time (synchronous)
- alternating
- pulses with half of the other pulse frequency

Only the start times of the single pulses are synchronised, not their duration. This always corresponds to the own pulse time of the machine set by the synergy characteristic curve.

Every welding power source can set the frequency as pulse generator or, as pulse receiver, synchronise to the frequency of the pulse generator.

4.1 Configuration

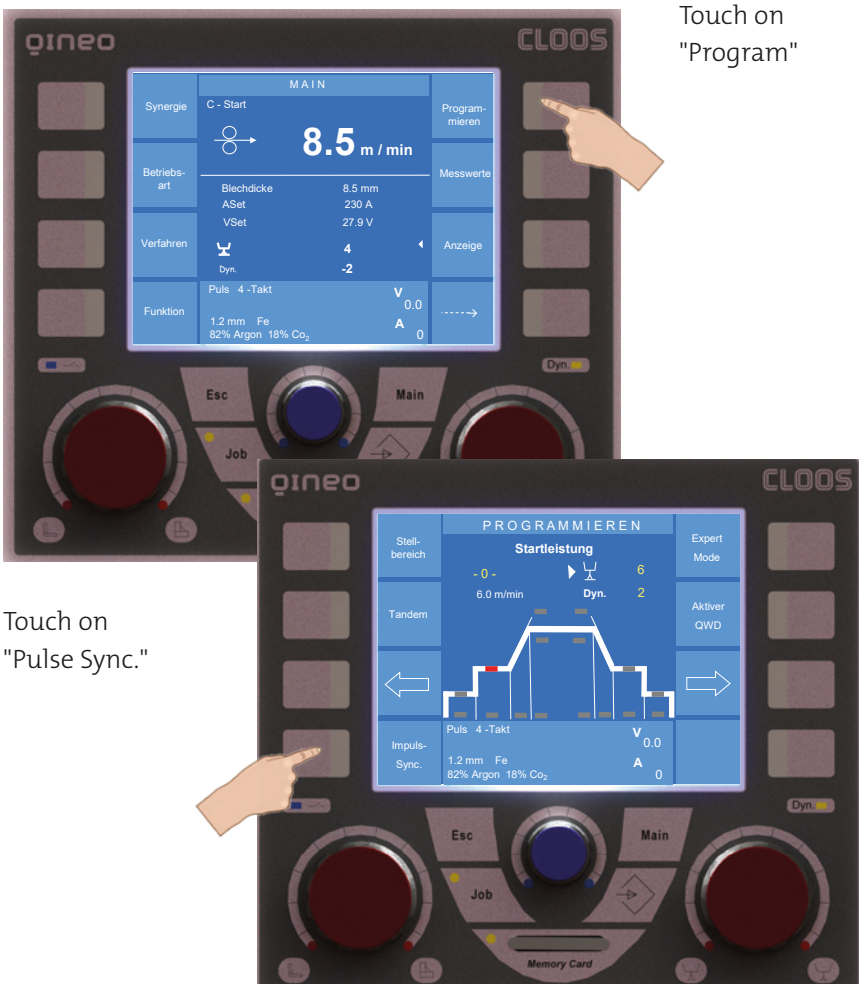

Touch on "Program"

Touch on "Pulse Sync."

4.1.1 Synchronisation mode

Name	Function
"Pulse generator"	The pulse cycle of the welding power source is available for synchronisation.
"Pulse receiver"	The welding power source executes its pulses at the configured time depending on the pulse generator.
"Asynchronous"	

The allocation of pulse generator and pulse receiver is individually determined for each weld seam.

- If a welding power source starts welding earlier or if a weld is longer, you have to configure this machine as pulse generator.
- When the welding times and the weld lengths are the same, a pulse generator can be freely allocated.

4.1.2 Phase shift

The pulse phases [f_1, f_2, ... f_n] of as many welding power sources as desired can now be synchronised with each other.

Name	Function
"Pulse receiver synchronous"	The welding power source executes its pulses at the same time as the "pulse generator".
"Pulse receiver synchronous ½"	The welding power source executes every second pulse at the same time as the "pulse generator" so that it welds with half of the pulse frequency.
"Pulse receiver alternating"	The welding power source executes the pulse temporarily offset before or after the pulse of the "pulse generator". The offset depends on the set phase shift.
"Pulse receiver alternating ½"	The welding power source executes every second pulse temporarily offset before or after the pulse of the "pulse generator". The offset depends on the set phase shift.

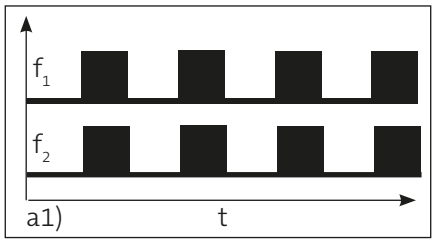

a1) Synchronous [$f_1 = f_2$]

With this adjustment all pulse phases [f_1, f_2 ... f_n] of the welding power sources involved are executed synchronously.

→ "**Pulse generator (f_1)" - "Pulse receiver (f_2)" synchronous.**

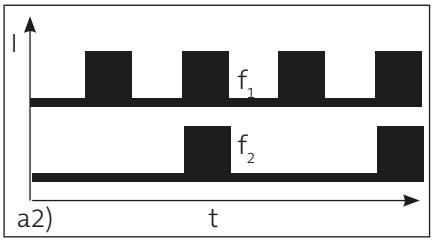

a2) Synchronous 1/2 [½ $f_1 = f_2$]

With this adjustment the pulse phase [f_2 ... f_n] of the welding power sources is synchronised with half of the pulse phase frequency of the welding power source (f_1). The pulse phases are synchronously executed.

→ "**Pulse generator (f_1)" - "Pulse receiver (f_2)" synchronous 1/2.**

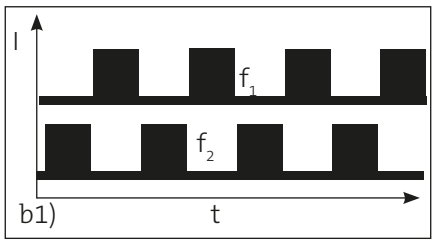

b1) Alternating [$f_1 = f_2$]

The pulse phases [f_2 ... f_n] of the welding power sources involved alternate with the pulse generator. The phase shift is adjusted at the pulse generator between 10 % and 90 %. The picture shows a phase shift of 50 %.

Alternately synchronised pulse mode has a mostly positive influence on the process stability.

→ **"Pulse generator (f_1)" - "Pulse receiver (f_2)" alternating.**

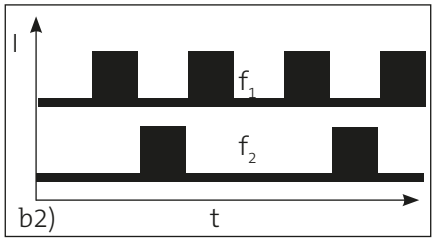

b2) Alternating 1/2 [½ $f_1 = f_2$]

With this adjustment the pulse phases [f_2 ... f_n] of the welding power sources are synchronised with half of the frequency of the welding power source (f_1). The phase shift is adjusted at the pulse generator between 10 % and 90 %. The picture shows a phase shift of 50 %.

The pulse phases are alternately synchronous.

→ **"Pulse generator (f_1)" - "Pulse receiver (f_2)" alternating 1/2.**

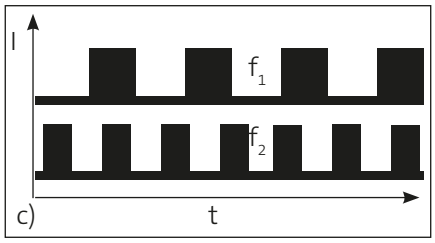

c) Asynchronous [$f_1 \neq f_2$]

With this adjustment all pulse phases [f_1, f_2 ... f_n] of the welding power sources involved are executed asynchronously.

Use this adjustment when a synchronisation, also alternating, is not imperative during welding.

→ **"Pulse generator (f_1)" - "Pulse receiver (f_2)" asynchronous**

5. Job allocation

The selected welding parameters are determined as so-called "jobs" and saved in the welding power sources. The determination in jobs allows to change them at will.

INFO!

It is recommended to assign the job numbers according to a previously fixed definition. Thus the correct allocation of the welding power source is clearer and can be ensured easier.

INFO!

Save a new job in the case of changed adjustments of the operating mode or the welding process.

Touch the key with the shown symbol on the operating module.
You enter the "Save job" menu.

In this case please note the following:

- When the pulse synchronisation is used together with the Tandem process, the same job number is automatically invoked in the welding power sources. The master welding power source ensures that jobs with the same number are activated in both welding power sources.
- If the pulse synchronisation is used in connection with two or more individual processes, a corresponding job has to be called in the welding power sources.

The following scenarios can be realised using the examples below:

- **"Tandem mode" with two synchronised pulsed arcs and different capacities**

The seam tracking signal and the synchronisation are automatically switched when selecting the corresponding job, here 101...103 or 201...203. The welding power source with the leading wire "tracks" and is the pulse generator.

Job number	Wire in front	Wire in the back	Operating mode Tandem	"Seam tracking signal"	"Synergy variant"		"Pulse synchronisation"		"Process"
					"Master"	"Slave"	"Master"	"Slave"	
101	M	S	"Tandem"	M	leading	following	Pulse generator	Pulse receiver alternating	S-Pulse
102	M	S	"Tandem"	M	leading	following	async.	async.	S-Pulse
103	M	S	"Tandem"	M	leading	following	async.	async.	Normal
201	S	M	"Tandem"	S	following	leading	Pulse receiver alternating	Pulse generator	S-Pulse
202	S	M	"Tandem"	S	following	leading	async.	async.	S-Pulse
203	S	M	"Tandem"	S	following	leading	async.	async.	Normal

- **"Tandem mode" with only one wire in the Tandem torch ("Tandem-Single Wire")**

A wire drive unit of the master or the slave welding power source is used depending on the application. The corresponding job selection is sufficient, here 112, 113 or 212, 213. Select in the adjustments which wire is welded with which synergy characteristic curve. Both gas valves are opened. The seam tracking signal automatically comes from the welding power source which is just welding.

Job number	Wire in front	Wire in the back	Operating mode Tandem	"Seam tracking signal"	"Synergy variant"		"Pulse synchronisation"		"Process"
					"Master"	"Slave"	"Master"	"Slave"	
112	-	S	"Slave single wire T torch"	S	Standard	Standard	async.	async.	S-Pulse
113	-	S	"Slave single wire T torch"	S	Standard	Standard	async.	async.	Normal
212	-	M	"Master single wire T torch"	M	Standard	Standard	async.	async.	S-Pulse
213	-	M	"Master single wire T torch"	M	Standard	Standard	async.	async.	Normal

- **Master welding power source with additional single wire torch**

If the master welding power source has a second wire drive unit with a single wire torch, one job is enough to save the required adjustments, here 151 or 152.

Job number	Wire in front	Wire in the back	Operating mode Tandem	"Seam tracking signal"	"Synergy variant"		"Pulse synchronisation"		"Process"
					"Master"	"Slave"	"Master"	"Slave"	
151	-	-	-	M	-	-	async.	-	Normal
152	-	-	-	M	-	-	async.	-	S-Pulse

- **"Hot transfer" of the welding parameters from the "Tandem-Single wire" to the "Tandem mode“ and vice versa**

The welding power source which is added to or removed from the Tandem mode has to be entered in the menu item "Synergy variant" as "Tandem leading" and in the menu item "IPS mode" as "pulse generator".

In addition, the two welding parameter lists (start and end) and the program selection (= job selection) must remain identical in the robot controller.

Job number	Wire in front	Wire in the back	Operating mode Tandem	"Seam tracking signal"	"Synergy variant"		"Pulse synchronisation"		"Process"
					"Master"	"Slave"	"Master"	"Slave"	
101	M	S	"Tandem"	M	leading	following	Pulse generator	Pulse receiver alternating	S-Pulse
111	-	S	**"Slave single wire T torch"**	**S**	leading	**Standard**	Pulse generator	**async.**	S-Pulse
201	S	M	"Tandem"	S	following	leading	Pulse receiver alternating	Pulse generator	S-Pulse
211	-	M	**"Master single wire T torch"**	**M**	**Standard**	leading	**async.**	Pulse generator	S-Pulse

CLOOS

Weld your way.

www.qineo.de